marantz

CD 70 | CD Player

Owner's Manual

Accessories 4
Inserting the batteries 5
Operating range of the remote control unit 5
Part names and functions 6
Front panel 6
Display 8
Rear panel 9
Remote control unit 10

Connections

Connecting an amplifier 16
Connecting to a device with digital audio input connectors 17
Connecting a USB flash drive to the USB port 18
Connecting devices with remote control connectors 19
Connection 19
Setting 19
Connecting the timer device 20
Connecting the power cord 21

Playback

Basic operation 23
Turning the power on 23
Switching the power to standby 23
Selecting the playback media mode 24
Switching the display's brightness 24
Playing CDs 25
Playing CDs 25
Playing tracks in a specific order (Program playback) 27
Playing DATA CDs 28
Playing files 29
Playing a USB flash drive 31
Playing files stored on USB flash drives 32

Settings

Menu map 34
- Menu operation 35

HP Amp Gain 36
Filter 36
Digital Out 37
Power On Sync 37
Timer Play 38
Auto-Standby 38

Tips

Tips 40
Troubleshooting 41
- Power does not turn on / Power is turned off 42
- Operations cannot be performed through the remote control unit 43
- Display on this unit shows nothing 43
- No sound comes out 44
- Sound is interrupted or noise occurs 44
- Desired sound does not come out 44
- USB flash drives cannot be played back 45
- Cannot playback Discs 46

Appendix

Playing back Discs 47
- Files 47

Playing back a USB flash drives 49
Playback order of music files 50
About discs and files 51
Cautions on using media 52
- Loading discs 52
- How to handle media 53
- Cleaning discs 53

Explanation of terms 54
Specifications 56
Index 59

Thank you for purchasing this Marantz product. To ensure proper operation, please read this owner's manual carefully before using the product. After reading this manual, be sure to keep it for future reference.

Accessories

Check that the following parts are included with the product.

Quick Start Guide	Safety Instructions	Cautions on Using Batteries	Power cord
Remote control unit (RC006PMCD)	2× R03/AAA batteries	Audio cable	Remote connector cable

Inserting the batteries

1 **Remove the rear lid in the direction of the arrow and remove it.**

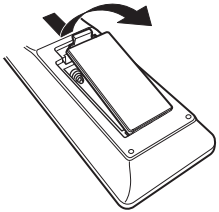

2 **Insert two batteries correctly into the battery compartment as indicated.**

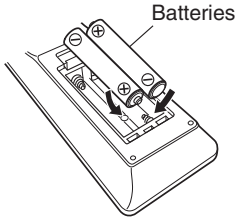

3 **Put the rear lid back on.**

NOTE

- To prevent damage or leakage of battery fluid:
  - Do not use a new battery together with an old one.
  - Do not use two different types of batteries.
- Remove the batteries from the remote control unit if it will not be in use for long periods.
- If the battery fluid should leak, carefully wipe the fluid off the inside of the battery compartment and insert new batteries.

Operating range of the remote control unit

Point the remote control unit at the remote sensor when operating it.

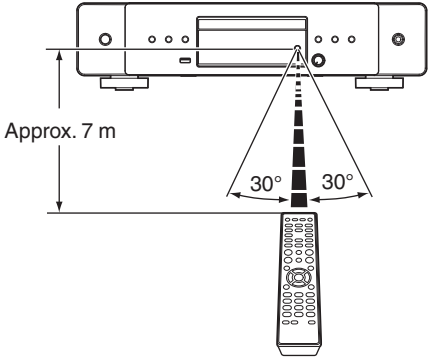

Part names and functions

Front panel

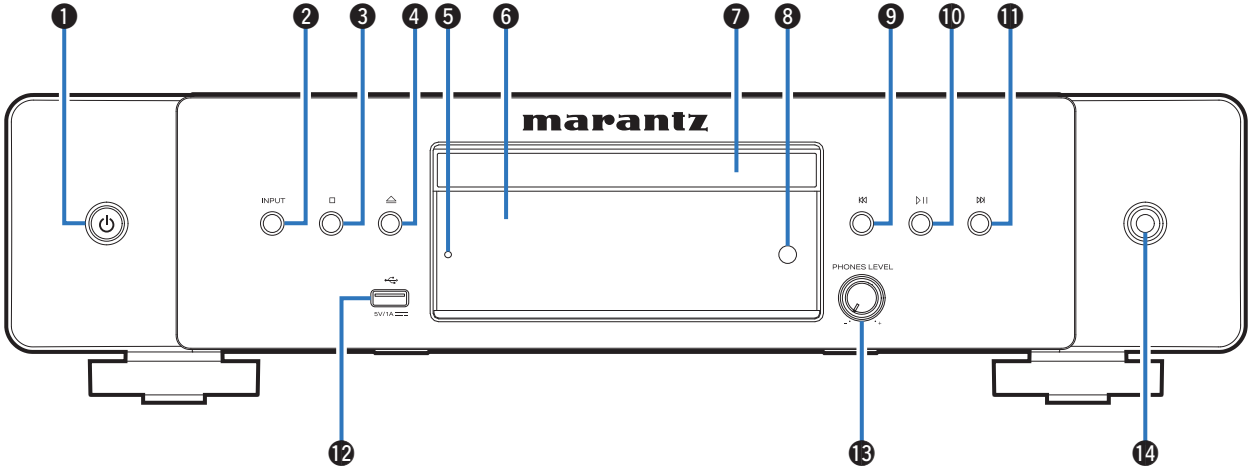

For details, see the next page.

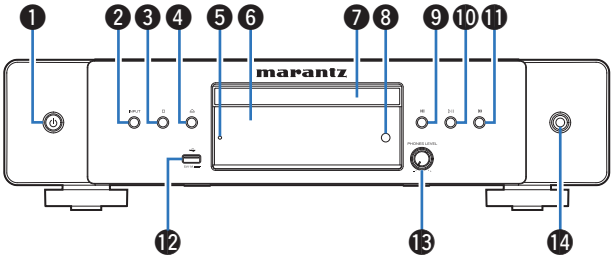

❶ **Power (⏻) button**
This turns the power on/off (standby). (☞ p. 23)

❷ **INPUT button**
Used to select the playback source. (☞ p. 24)

❸ **Stop button (□)**
Stops playback.

❹ **Disc tray open/close button (⏏)**
Opens and closes the disc tray. (☞ p. 25)

❺ **Protection circuit indicator**
This blinks when the protection circuit has operated. (☞ p. 42)

❻ **Display**
Various information is displayed here. (☞ p. 8)

❼ **Disc tray**
Used to insert a disc.

❽ **Remote control sensor**
This receives signals from the remote control unit. (☞ p. 5)

❾ **Reverse-skip button (⏮)**
Returns to the start of the currently playing track. Press and hold to fast-reverse the track.

❿ **Play/Pause button (⏯)**
Press this button to pause during playback. If pressed while paused or stopped, resumes playback from the last track played.

⓫ **Forward-skip button (⏭)**
Plays the next track. Press and hold to fast-forward the track.

⓬ **USB port**
This is used to connect USB storages (such as USB flash drives). (☞ p. 18)

⓭ **Headphone volume control knob (PHONES LEVEL)**
Adjusts the headphone volume.

⓮ **Headphones jack**
Used to connect headphones.

NOTE

- To prevent hearing loss, do not raise the volume level excessively when using headphones.

Display

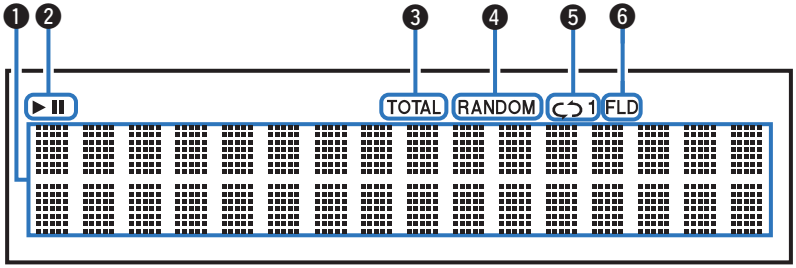

❶ **Information display**
Displays various information or playback elapsed time and so on of the disc.

❷ **Playback mode indicators**
► : Lights up during playback.
❚❚ : Lights up during pause.

❸ **TOTAL indicator**
Lights when the total number of tracks and total time of the CD are displayed.

❹ **RANDOM indicator**
Lights during random playback.

❺ **Repeat mode indicators**
Lights to match the repeat mode settings.

❻ **Folder playback mode indicator**
Lights up when the folder playback mode is set in the CD-R/CD-RW or USB flash drive playback range. (“CD-R/CD-RW” (☞ p. 30), “USB flash drive” (☞ p. 33))

Rear panel

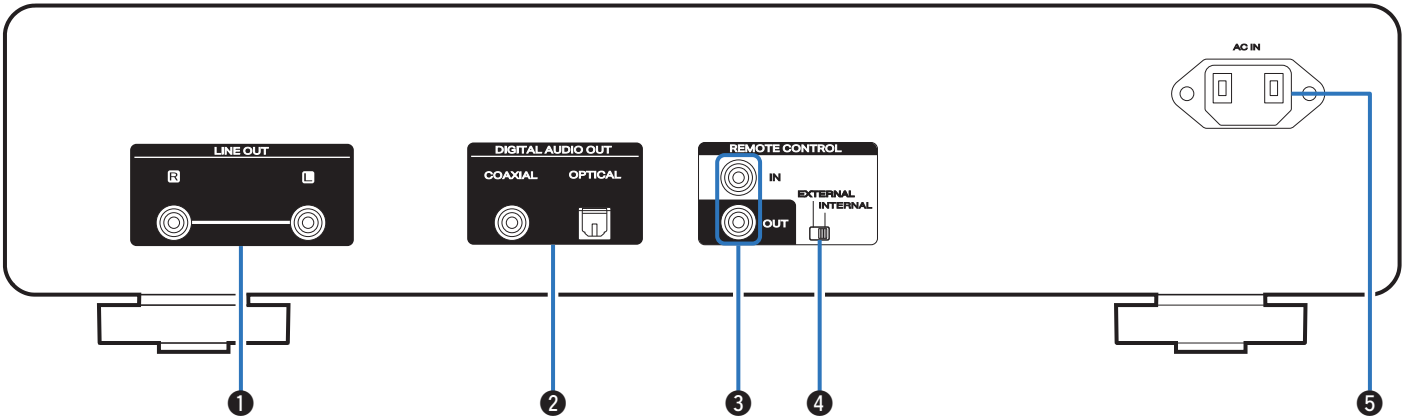

❶ **LINE OUT connectors**
Used to connect devices equipped with analog audio inputs connectors or an external amplifier. (☞ p. 16)

❷ **DIGITAL AUDIO OUT connectors (COAXIAL/OPTICAL)**
Used to connect an amplifier or D/A converter that has a digital input connectors. (☞ p. 17)

❸ **REMOTE CONTROL connectors**
Used to connect to a Marantz amplifier that is compatible with the remote control function. (☞ p. 19)

❹ **EXTERNAL/INTERNAL switch**
Turn this switch to “EXTERNAL” to operate the unit by pointing the remote control at the amplifier connected to this unit using the remote control connection. (☞ p. 19)

❺ **AC inlet (AC IN)**
Used to connect the power cord. (☞ p. 21)

Remote control unit

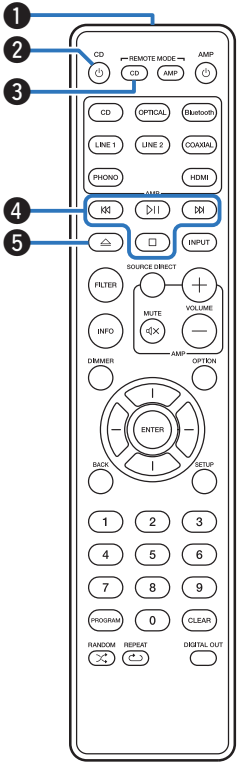

The remote control provided with this unit can control a Marantz amplifier.

- “Amplifier operations” (☞ p. 13)

■ Operating this unit

To operate this unit, press REMOTE MODE CD button to switch the remote control operating mode to this unit.

❶ **Remote control signal transmitter**
This transmits signals from the remote control unit. (☞ p. 5)

❷ **Power (CD ⏻) button**
This turns the power on/off (standby). (☞ p. 23)

❸ **Remote mode select button (REMOTE MODE CD)**
Switches the remote control operating mode to this unit.

❹ **System buttons**
These perform playback related operations.

❺ **Disc tray open/close button (⏏)**
Opens and closes the disc tray. (☞ p. 25)

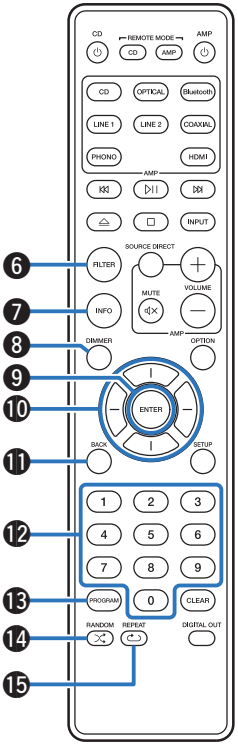

6 FILTER button

This switches the filter characteristics. (☞ p. 36)

7 Information button (INFO)

This switches the track information shown in the display during playback.

8 DIMMER button

This switches the brightness of the display. (☞ p. 24)

9 ENTER button

This determines the selection.

10 Cursor buttons

These select items.

11 BACK button

Returns to the previous item.

12 Number buttons (0 – 9)

These enter numbers into the unit.

13 PROGRAM button

This sets program playback. (☞ p. 27)

14 RANDOM button (⤮)

Switches the random playback.

15 REPEAT button (⟲)

Switches to the repeat playback.

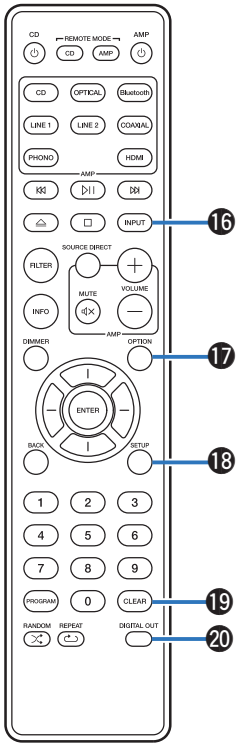

⑯ Media mode select button (INPUT)

Used to select the playback source. (☞ p. 24)

⑰ OPTION button

- Selects the playback range of the data CD. (☞ p. 30)
- Selects the playback range of the USB flash drive. (☞ p. 33)

⑱ SETUP button

This displays the setting menu on the display. (☞ p. 35)

⑲ CLEAR button

This clears the program registration. (☞ p. 27)

⑳ DIGITAL OUT button

This switches the digital audio output on or off.

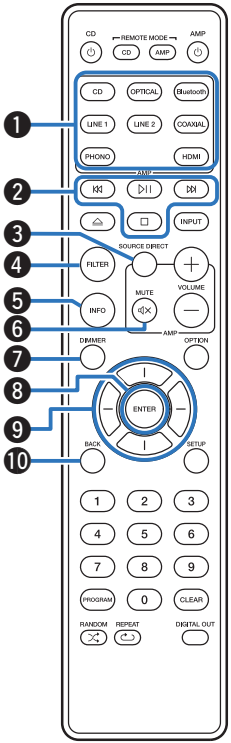

Amplifier operations

A Marantz amplifier can be operated.
To operate amplifier, press REMOTE MODE AMP button to switch the remote control to the amplifier operation mode.

1. **Input source select buttons**
2. **System buttons**
3. **SOURCE DIRECT button**
4. **FILTER button**
5. **Information button (INFO)**
6. **MUTE button (🔇)**
7. **DIMMER button**
8. **ENTER button**
9. **Cursor buttons**
10. **BACK button**

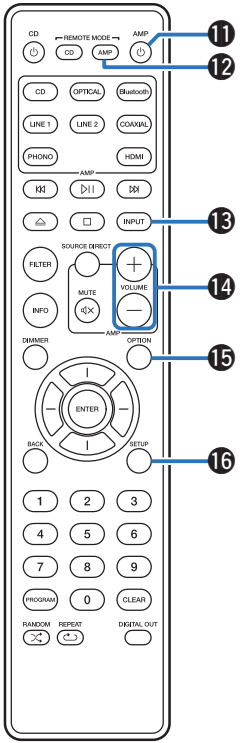

⓫ **Power (AMP ⏻) button**

⓬ **Remote mode select button (REMOTE MODE AMP)**

⓭ **INPUT button**

⓮ **VOLUME buttons (+−)**

⓯ **OPTION button**

⓰ **SETUP button**

- The remote control may not operate some products.

Contents

Connecting an amplifier	16
Connecting to a device with digital audio input connectors	17
Connecting a USB flash drive to the USB port	18
Connecting devices with remote control connectors	19
Connecting the timer device	20
Connecting the power cord	21

NOTE

- Do not plug in the power cord until all connections have been completed.
- Do not bundle power cords together with connection cables. Doing so can result in humming or noise.

Cables used for connections

Provide necessary cables according to the devices you want to connect.

Audio cable (included)	
Remote connector cable (included)	
Optical cable (not included)	
Coaxial digital cable (not included)	

Connecting an amplifier

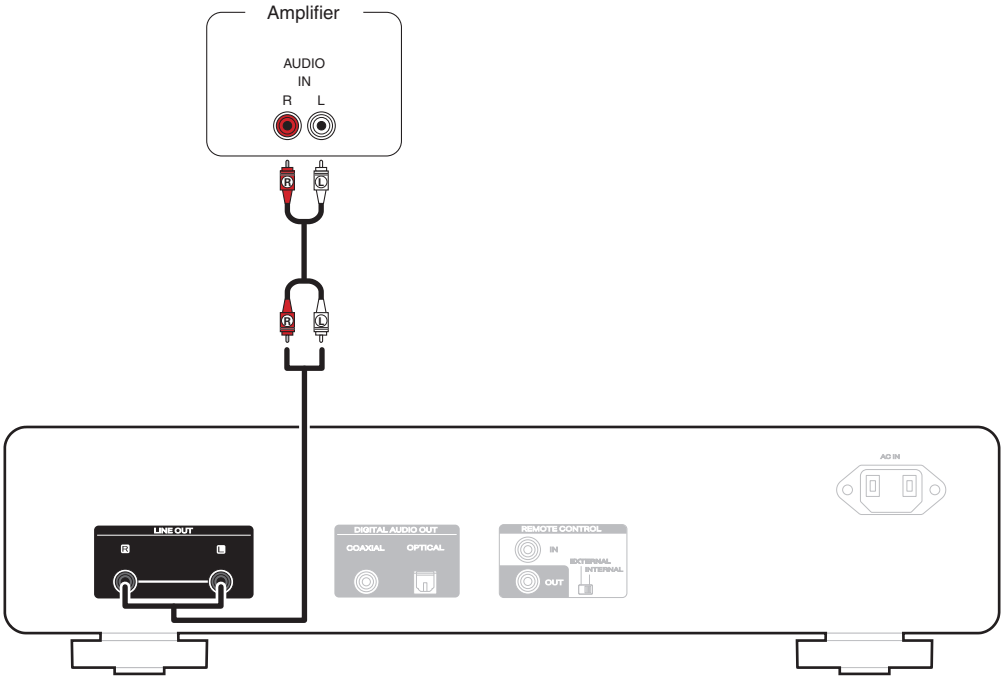

Connecting to a device with digital audio input connectors

You can enjoy digital audio playback by connecting an amplifier or D/A converter that has a digital audio connector to this unit.

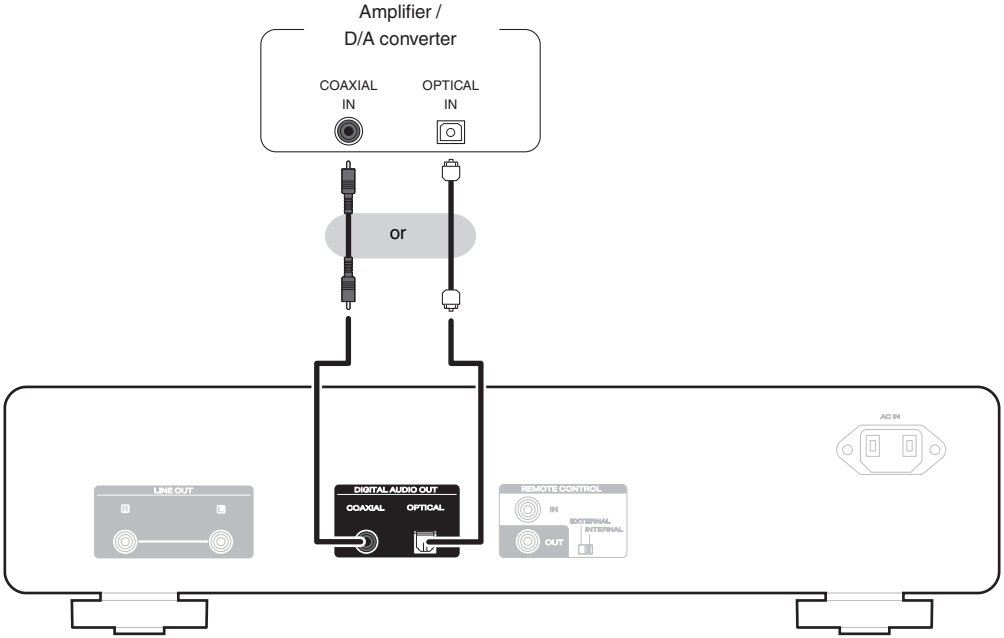

NOTE

- Digital audio output stops during playback of the DSD files via USB flash drive.
- To connect recorder that has a digital audio connector isn't recommended.

Connecting a USB flash drive to the USB port

For operating instructions see “Playing a USB flash drive”. (☞ p. 31)

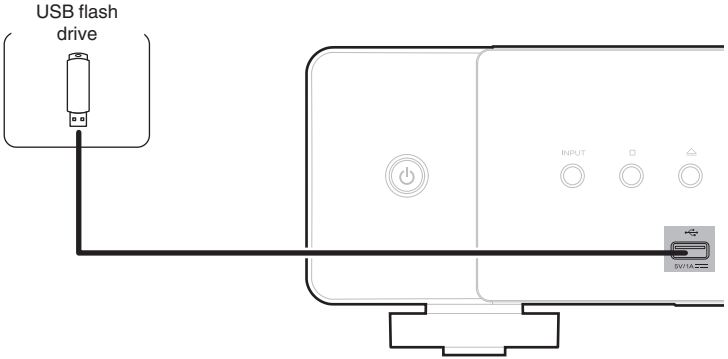

- Marantz does not guarantee that all USB flash drives will operate or receive power. When using a portable USB hard disk drive (HDD) which came with an AC adapter, use that device’s included AC adapter.

NOTE

- USB flash drives will not work via a USB hub.
- It is not possible to use this unit by connecting the unit’s USB port to a PC via a USB cable.
- Do not use an extension cable when connecting a USB flash drive. This may cause radio interference with other devices.

Connecting devices with remote control connectors

The following functions can be used when this unit is connected to a Marantz amplifier.

- The remote control signal received with the amplifier is transmitted to this unit in order to control this unit.
- When the power of this unit is turned on, the power of the amplifier turns on, and the input source for the amplifier switches to “CD”. (“Power On Sync” function)

- You can set the “Power On Sync” function to on or off in “Power On Sync” in the settings menu. (☞ p. 37)
- Some operations may not be possible on some Marantz amplifiers.

Connection

Use the included remote connector cable to connect the REMOTE CONTROL IN connector of this unit to REMOTE CONTROL OUT connector of the amplifier.

Setting

Turn the EXTERNAL/INTERNAL switch on the unit to “EXTERNAL”.

- This setting will disable remote sensor reception of this unit.
- To operate the unit, point the remote control at the remote sensor of the amplifier.

- To use this unit by itself without connecting an amplifier, turn the switch to “INTERNAL”.

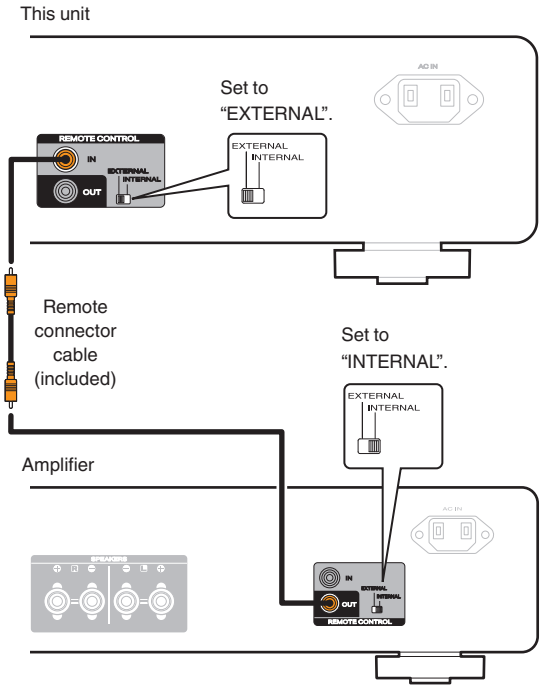

Connecting the timer device

This unit can perform timer play when an amplifier and timer device are connected to this unit. (“Timer Play” (☞ p. 38))

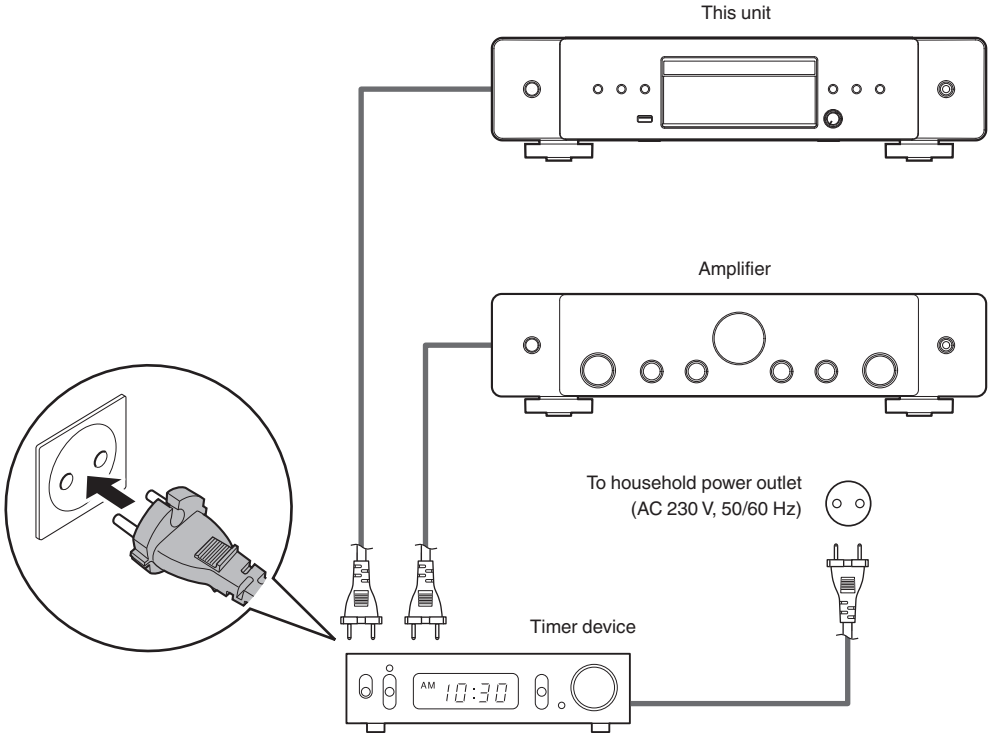

Connecting the power cord

After completing all the connections, insert the power plug into the power outlet.

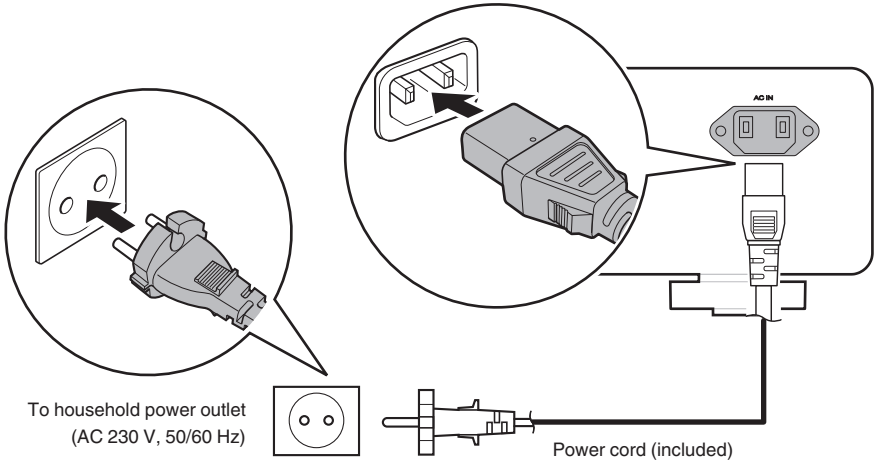

Contents

Basic operation 23
Playing CDs 25
Playing DATA CDs 28
Playing a USB flash drive 31

Basic operation

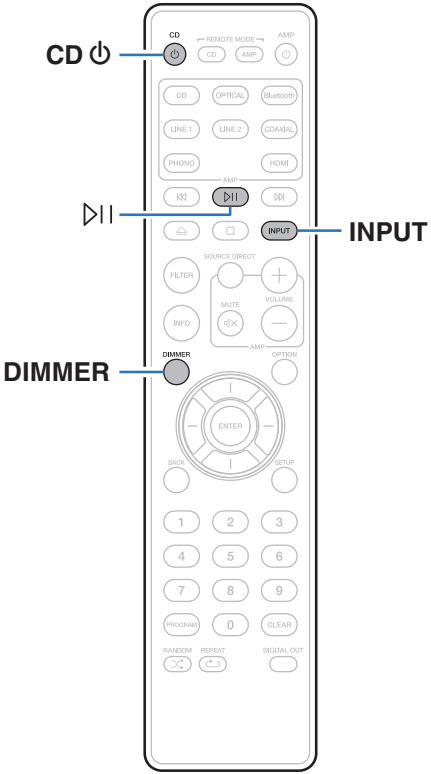

Turning the power on

1 Press CD ⏻ to turn on power to the unit.

- You can also press ⏻ on the main unit to turn on power from standby mode.
- You can also press ▷II to turn on power from standby mode.

Switching the power to standby

1 Press CD ⏻.

The unit switches to standby mode.

- You can also switch the power to standby by pressing ⏻ on the main unit.

NOTE

- Power continues to be included to some of the circuitry even when the power is in the standby mode. When leaving home for long periods of time or when going on vacation, unplug the power cord from the power outlet.

Selecting the playback media mode

1 **Press INPUT to select the playback media mode.**

Disc (Default)**:**	Select to playback a disc.
USB:	Select to playback a USB flash drive.

- You can also select the playback media mode by pressing INPUT on the main unit.

Switching the display's brightness

The display brightness can be adjusted between four levels. Switching the display off reduces a source of noise that affects sound quality, enabling higher sound quality playback.

1 **Press DIMMER.**

- The brightness of the display switches each time the button is pressed.

- The display brightness is set to most brightly by default.
- If buttons are operated when the display is off, information is temporarily displayed at the brightest setting.
- The display is only turned off during playback.

Playing CDs

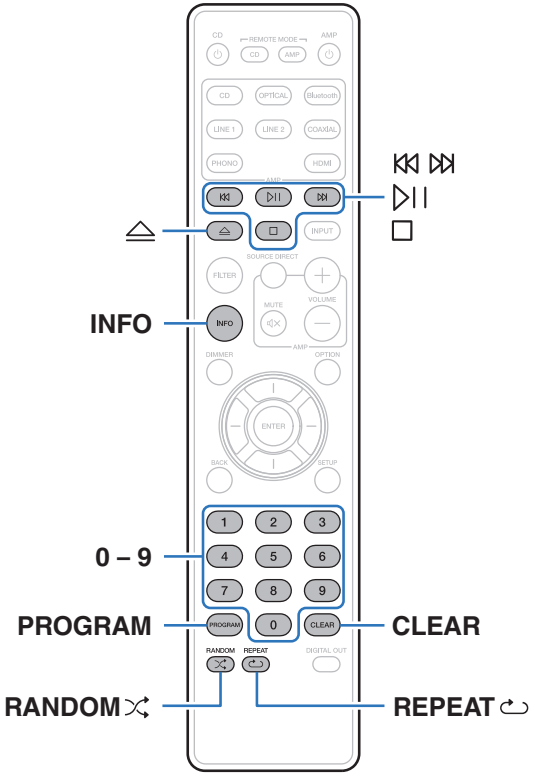

Playing CDs

1 **Insert a disc.** (☞ p. 52)

- Press ⏏ to open/close the disc tray.

2 **Press ⏯.**

The ▶ indicator lights on the display. Playback starts.

NOTE

- Do not place any foreign objects in the disc tray. Doing so could damage the unit.
- Do not push the disc tray in by hand when the power is turned off. Doing so could damage the unit.

Operation buttons	Function
⏯	Playback / Pause
◻	Stop
⏮ ⏭	Skip to previous track / Skip to next track
	(Press and hold) Fast-reverse / Fast-forward
0 - 9	Select the track
RANDOM ⤮	Random playback
REPEAT ⟲	Repeat playback • Switching between All-track repeat, Single-track repeat and Repeat off.
INFO	Time display switching • Switching between elapsed time of the current track, remaining time of the current track and remaining time of all tracks. • The time displayed on this unit may differ from this actual time, as it is calculated by truncating to the nearest 1 second.

■ Discs that can be played back

- See “About Playing Back Discs”. (☞ p. 47)

■ Playing a specific track (Direct searching)

1 Use 0 – 9 to select the tracks.

【Example】
Track 4 :
Press number 4 to select track 4.
Track 12 :
Press numbers 1 and 2 consecutively to select track 12.

- The number you enter is set about 1.5 seconds after you press the number buttons. To enter a two-digit number, be sure to press the two number buttons, one immediately after the other.

Playing tracks in a specific order (Program playback)

Up to 25 tracks can be programmed.

1 In the stop mode, press PROGRAM.

"Program" appears on the display.

2 Use 0 – 9 to select the tracks.

【Example】

Track 4 :

Press number 4 to select track 4.

Track 12 :

Press numbers 1 and 2 consecutively to select track 12.

- The number you enter is set about 1.5 seconds after you press the number buttons. To enter a two-digit number, be sure to press the two number buttons, one immediately after the other.

3 Press ▷II.

Playback starts in the programmed order.

- The program is cleared when the disc tray is opened or the power is turned off.
- When RANDOM ⤮ is pressed during program playback, the programmed tracks are played in random order.
- When REPEAT ⟲ is pressed during program playback, the tracks are played repeatedly in the programmed order.

Checking the order of the programmed tracks

In the stop mode, press ⏭.

The tracks are shown in the programmed order in the display each time ⏭ is pressed.

To clear the last track programmed

In the stop mode, press CLEAR.

The last track programmed is cleared each time the button is pressed.

- You can also select a track to be cleared by pressing ⏭.

Clearing the all programmed track

In the stop mode, press PROGRAM.

Playing DATA CDs

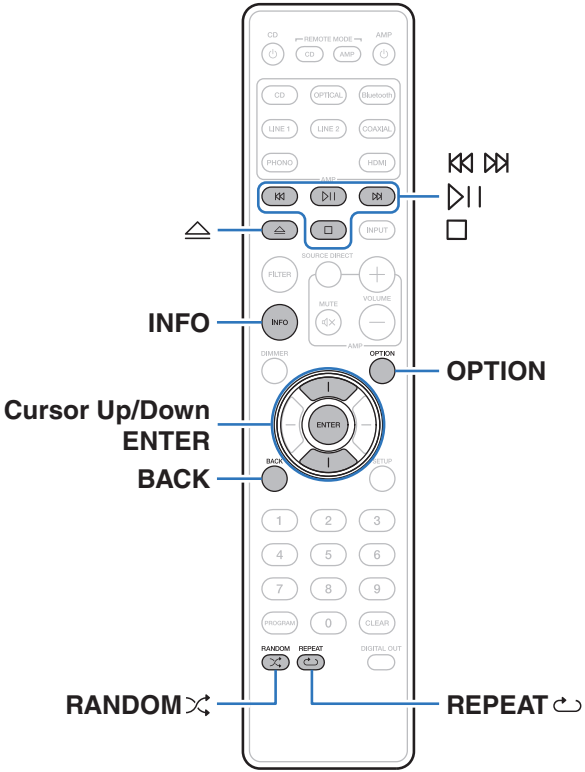

- This section explains how to playback music files that are recorded onto a CD-R/CD-RW.
- There are many music distribution sites on the Internet allowing you to download music files in MP3 or WMA (Windows Media® Audio) format. The music (files) downloaded from such sites can be stored on CD-R/CD-RW discs and played on this unit.
- The audio format types and specifications supported by this unit for playback are as follows.
  See “Playable files” for details. (☞ p. 47)
  - **MP3**
  - **WMA**

NOTE

- Copyright-protected files cannot be played.
- Note that depending on the software used for burning and other conditions, some files may not play or display correctly.

“Windows Media” and “Windows” are the trademarks or registered trademarks of Microsoft Corporation in the United States and other countries.

Playing files

1 **Load a CD-R/CD-RW disc containing music files into the disc tray. (☞ p. 52)**

- Press ⏏ to open/close the disc tray.

2 **Use Cursor Up/Down buttons to select the music file to be played from the CD-R/CD-RW music data, then press ENTER.**

Playback starts.

Operation buttons	Function
⏯	Playback / Pause
◻	Stop
⏮ ⏭	Skip to previous track / Skip to next track
	(Press and hold) Fast-reverse / Fast-forward
BACK	Moving up a level in the folder tree
Cursor Up/Down	Select the item
ENTER	Enter the selected item / Playback
OPTION	Select the playback range
RANDOM ⤮	Random playback
REPEAT ⟲	Repeat playback • Switching between All-track repeat, Single-track repeat and Repeat off.
INFO	Switches the display between Title name / Artist name, Title name / Album name and File name.

- To start playing another file during playback of a CD-R/CD-RW, first press BACK to display the file tree. Next, use Cursor Up/Down buttons to select the file to be played and press ENTER.

Switching the display

During playback, press INFO.

- Switches the display between Title name / Artist name, Title name / Album name and File name.
- If a file does not support text information or no track information is recorded, the file name is displayed.
- The player can display the following characters:

ABCDEFGHIJKLMNOPQRSTUVWXYZ
abcdefghijklmnopqrstuvwxyz
0123456789
! ” # $ % & : ; < > ? @ ＼ [ ] _ ` I { } ~ ^ ’( ) * + , - . / = space

- Any characters that cannot be displayed are replaced with “.” (period).

Switching the playback range

In the stop mode, press OPTION.

- The playback range of a track can be set.

Folder playback mode:	All the files in the selected folder are played. The “FLD” indicator on the display lights at this time.
All playback mode:	All the files in the disc are played.

Playing a USB flash drive

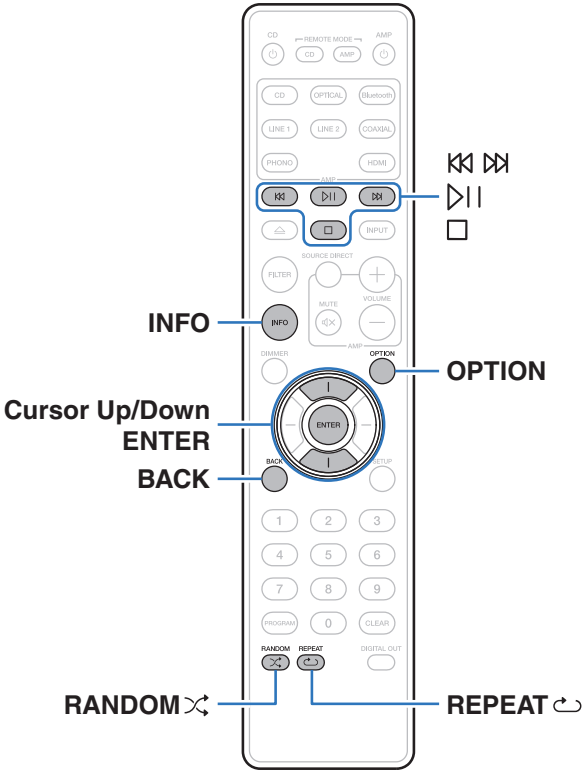

- Playing back music files stored on a USB flash drive.
- Only USB flash drives conforming to mass storage class standards can be played on this unit.
- This unit is compatible with USB flash drives in “FAT16” or “FAT32” format.
- The audio format types and specifications supported by this unit for playback are as follows.
  For details, see “Playing back a USB flash drives” (☞ p. 49).
  - **WMA**
  - **MP3**
  - **WAV**
  - **MPEG-4 AAC**
  - **FLAC**
  - **Apple Lossless**
  - **AIFF**
  - **DSD**

Playing files stored on USB flash drives

1 **Connect the USB flash drive to the USB port.**
(☞ p. 18)

2 **Press INPUT to select the playback media mode to "USB".**

3 **Use Cursor Up/Down buttons to select the folder to be played, then press ENTER.**

4 **Use Cursor Up/Down buttons to select the file to be played, then press ENTER.**
Playback starts.

Operation buttons	Function
⏯	Playback / Pause
◻	Stop
⏮ ⏭	Skip to previous track / Skip to next track
	(Press and hold) Fast-reverse / Fast-forward
BACK	Moving up a level in the folder tree
Cursor Up/Down	Select the item
ENTER	Enter the selected item / Playback
OPTION	Select the playback range
RANDOM ⤮	Random playback
REPEAT ⟲	Repeat playback • Switching between All-track repeat, Single-track repeat and Repeat off.
INFO	Switches the display between Title name / Artist name, Title name / Album name and File name.

- To start playing another file during playback of a USB flash drive, first press BACK to display the file tree. Next, use Cursor Up/Down buttons to select the file to be played and press ENTER.

NOTE

- Note that Marantz will accept no responsibility whatsoever for any problems arising with the data on a USB flash drive when using this unit in conjunction with the USB flash drive.
- When a USB flash drive is connected to this unit, the unit loads all of the files on the USB flash drive. Loading may take a while if the USB flash drive contains a large number of folders and/or files.

Switching the playback range

Press OPTION.

- The playback range of a track can be set.

Folder playback mode:	All the files in the selected folder are played. The “FLD” indicator on the display lights at this time.
All playback mode:	All the files in the USB flash drive are played.

Menu map

For menu operations, see the following page.

By default, this unit has recommended settings defined. You can customize this unit based on your existing system and your preferences.

Setting items	Description	Page
HP Amp Gain	Set the gain of the headphone amplifier.	36
Filter	This unit is equipped with a sound quality adjusting function which allows users to enjoy the desired playback sound quality.	36
Digital Out	Stopping digital audio output reduces a source of noise that affects sound quality, enabling higher sound quality playback.	37
Power On Sync	Set the “Power On Sync” function to On/Off to determine whether the power of the Marantz amplifier connected to this unit turns on in conjunction with the power on operation of this unit and to switch the input source of the amplifier to “CD”.	37
Timer Play	This unit can perform timer play by cooperating with your timer device.	38
Auto-Standby	Sets whether to automatically switch the unit to the standby mode when the unit remains in the stop mode for more than 15 minutes.	38

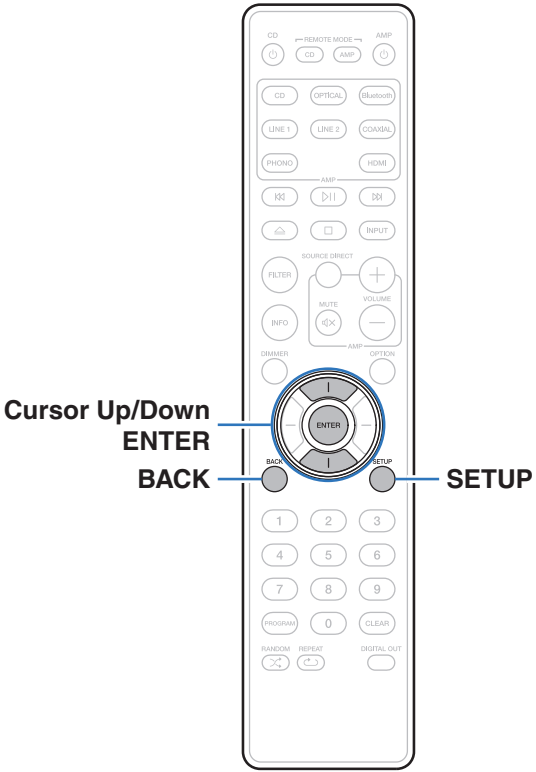

Menu operation

1 Press SETUP while playback is stopped.

The menu is displayed on the display.

2 Use Cursor Up/Down buttons to select the menu to be set or operated, then press ENTER.

3 Use Cursor Up/Down buttons to change to desired setting.

4 Press ENTER to enter the setting.

- To return to the previous item, press BACK.
- Exiting the Menu, press SETUP while the menu is displayed. The display returns to the normal display.

HP Amp Gain

Set the gain of the headphone amplifier. Set this according to the impedance of the connected headphones. It is recommended that this is set on the “Low” side if the headphones have low impedance and on the “High” side if they have high impedance.

High:	Set the gain of the headphone amplifier to “High”. Set when there is insufficient volume, even when the gain setting is “Mid”.
Mid:	Set the gain of the headphone amplifier to “Mid”. Set when there is insufficient volume, even when the gain setting is “Low”.
Low (Default)**:**	Set the gain of the headphone amplifier to “Low”.

NOTE

- The headphone volume varies depending on the “HP Amp Gain” setting. Decrease the volume or mute the audio first if changing this setting while listening to audio.

Filter

This unit is equipped with a sound quality adjusting function which allows users to enjoy the desired playback sound quality. The unit supports PCM signal.

Filter 1 (Default)**:**	Offers a short impulse response for both pre-echo and post-echo. Large amount of audio information clearly reproduces deep stereo imaging and the relative position of the sound source.
Filter 2:	Both pre-echo and post-echo are slightly longer. The sound characteristics is edge and powerful.

Digital Out

Stopping digital audio output reduces a source of noise that affects sound quality, enabling higher sound quality playback.

On (Default)**:**	Use the digital audio output connector.
Off:	Do not use the digital audio output connector.

Power On Sync

Set the “Power On Sync” function to On/Off to determine whether the power of the Marantz amplifier connected to this unit turns on in conjunction with the power on operation of this unit and to switch the input source of the amplifier to “CD”. Make a remote connection between this unit and the Marantz amplifier in advance. (☞ p. 19)

On (Default)**:**	Enable the “Power On Sync” function.
Off:	Disable the “Power On Sync” function.

Timer Play

This unit can perform timer play by cooperating with your timer device. (“Connecting the timer device” (☞ p. 20))

Disc:	Set the media mode for timer play to “Disc”.
USB:	Set the media mode for timer play to “USB”.
Off (Default)**:**	Timer play is not set.

■ Using the timer play function

1. Turn on the power of the connected components. (☞ p. 20)
2. Load a disc or connect a USB flash drive.
3. Switch the amplifier’s function to input from the connected unit.
4. Set the audio timer for the desired times.
5. Turn the timer on.
   - The power of the components connected to the timer turns off.
   - When the set time is reached, the power of the different components automatically turns on and playback starts from the first track.

- The timer play does not support the random play or program play.
- The “Power On Sync” function does not work when this unit is turned on using the timer play function. (☞ p. 37)

Auto-Standby

Sets whether to automatically switch the unit to the standby mode when the unit remains in the stop mode for more than 15 minutes.

On (Default)**:**	Enable Auto Standby mode.
Off:	Disable Auto Standby mode.

■ Contents

Tips

I want to switch the filter to change the desired sound quality	40
I want to playback just the specified folder on a CD-R/CD-RW or USB flash drive	40
I want to randomly play back all tracks on a CD-R/CD-RW or USB flash drive	40
I want to playback high resolution music files	40

Troubleshooting

Power does not turn on / Power is turned off	42
Operations cannot be performed through the remote control unit	43
Display on this unit shows nothing	43
No sound comes out	44
Sound is interrupted or noise occurs	44
Desired sound does not come out	44
USB flash drives cannot be played back	45
Cannot playback Discs	46

Tips

I want to switch the filter to change the desired sound quality

- Switch the filter characteristics. (☞ p. 36)

I want to playback just the specified folder on a CD-R/CD-RW or USB flash drive

- Press the OPTION button to set the playback mode to folder playback mode. (“CD-R/CD-RW” (☞ p. 30), “USB flash drive” (☞ p. 33))

I want to randomly play back all tracks on a CD-R/CD-RW or USB flash drive

- Before playback, press the OPTION button to set the playback mode to “All playback mode”, then press the RANDOM⤮ for random playback. (“CD-R/CD-RW” (☞ p. 30), “USB flash drive” (☞ p. 33))

I want to playback high resolution music files

- This unit can playback high resolution music files that are stored on a USB flash drive. (☞ p. 49)

Troubleshooting

If a problem should arise, first check the following:

1. Are the connections correct?
2. Is the set being operated as described in the owner's manual?
3. Are the other devices operating properly?

If this unit does not operate properly, check the corresponding symptoms in this section.

If the symptoms do not match any of those described here, consult your dealer as it could be due to a fault in this unit. In this case, disconnect the power immediately and contact the store where you purchased this unit.

Power does not turn on / Power is turned off

Power is not turned on.

- Check whether the power plug is correctly inserted into the power outlet. (☞ p. 21)
- This unit is in standby mode. Press the CD ⏻ button on the remote control. (☞ p. 23)

Power automatically turns off.

- The auto standby mode setting is on. The auto standby mode automatically switches the unit to standby if there are no operations for more than 15 minutes. To disable the Auto Standby mode, set “Auto-Standby” on the menu to “Off”. (☞ p. 38)

The power turns off and the protection circuit indicator shows one long blink and three short blinks in orange.

- The protection circuit has been activated due to an error in the internal power supply. Unplug and reinsert the power cord, then press the ⏻ button to turn on the power again. If the problem is not solved by turning the power off and on again, unplug the power cord and contact our customer service center.

Operations cannot be performed through the remote control unit

Operations cannot be performed through the remote control unit.

- Batteries are worn out. Replace with new batteries. (☞ p. 5)
- Operate the remote control unit within a distance of about 7 m from this unit and at an angle of within 30°. (☞ p. 5)
- Remove any obstacle between this unit and the remote control unit.
- Insert the batteries in the proper direction, checking the ⊕ and ⊖ marks. (☞ p. 5)
- The unit's remote control sensor is exposed to strong light (direct sunlight, inverter type fluorescent bulb light, etc.). Move the set to a place in which the remote control sensor will not be exposed to strong light.
- When using a 3D video device, the remote control unit of this unit may not function due to effects of infrared communications between units (such as TV and glasses for 3D viewing). In this case, adjust the direction of units with the 3D communications function and their distance to ensure they do not affect operations from the remote control unit of this unit.
- When using this unit independently, set the switch to "INTERNAL". (☞ p. 19)

Display on this unit shows nothing

Display is off.

- Press the DIMMER button, and change the setting to anything other than off. (☞ p. 24)

No sound comes out

No sound is produced. Or sound is distorted.

- Check the connections for all devices. (☞ p. 15)
- Insert connection cables all the way in.
- Check that input connectors and output connectors are not reversely connected.
- Check cables for damage.
- Check the amplifier's functions and controls and adjust as necessary.
- Digital audio output stops during playback of the DSD files.

Sound is interrupted or noise occurs

During playback from the CD-R/CD-RW, sound is occasionally interrupted.

- This may be caused by poor recording conditions, or the disc itself may be of poor quality. Use a correctly recorded disc.

During playback from the USB flash drive, sound is occasionally interrupted.

- When the transfer speed of the USB flash drive is slow, sound may occasionally be interrupted.

Desired sound does not come out

Headphone volume is low.

- Switch "HP Amp Gain" to "Mid" or "High" if using headphones with high impedance or low sensitivity. (☞ p. 36)

USB flash drives cannot be played back

USB flash drive is not recognized.

- Disconnect and reconnect the USB flash drive. (☞ p. 18)
- Mass storage class compatible USB flash drives are supported.
- This unit does not support a connection through a USB hub. Connect the USB flash drive directly to the USB port.
- The USB flash drive must be formatted to FAT16 or FAT32.
- Not all USB flash drives are guaranteed to work. Some USB flash drives are not recognized. When using a type of portable hard disc drive compatible with the USB connection that requires power from an AC adapter, use the AC adapter that came with the drive.

Files on the USB flash drive are not displayed.

- Files of a type not supported by this unit are not displayed. (☞ p. 49)
- This unit is able to display files in a maximum of 16 folder layers. A maximum of 255 folders and 65025 files can be stored. Modify the folder structure of the USB flash drive.
- When multiple partitions exist on the USB flash drive, only files on the first partition are displayed.

iOS and Android devices are not recognized.

- The USB port of this unit does not support playback from iOS and Android devices.

Files on a USB flash drive cannot be played.

- Files are created in a format that is not supported by this unit. Check the formats supported by this unit. (☞ p. 49)
- You are attempting to play a file that is copyright protected. Files that are copyright protected cannot be played on this unit.
- Playback may not be possible if the album art file size exceeds 2 MB.

Cannot playback Discs

Cannot playback when the play button is pressed, or cannot correctly play back a specific part of the disc.

- The disc is dirty or scratched. Either clean the disc, or insert a different disc. (☞ p. 53)

Cannot playback CD-R/CD-RW.

- Discs cannot be played back unless they have been finalized. Use a finalized disc. (☞ p. 47)
- This may be caused by poor recording conditions, or the disc itself may be of poor quality. Use a correctly recorded disc.
- Files are created in a format that is not supported by this unit. Check the formats supported by this unit. (☞ p. 47)

“No Disc” is displayed.

- “No Disc” is displayed if the disc is loaded upside-down or if no disc is loaded. Check that the disc is loaded label side up.

“System Error” is displayed.

- “System Error” is displayed when an error not caused by disc, format, etc., occurs. Contact our customer service center.

“Can't Read Disc” is displayed.

- “Can't Read Disc” is displayed when the inserted disc cannot be read because it is not compatible with this unit or is dirty or scratched. Check the disc.

“Wrong Format” is displayed.

- “Wrong Format” is displayed for files created in a format that is not supported by this unit. Check the formats supported by this unit. (☞ p. 47)

Playing back Discs

Playable media	
CD	
CD-R	
CD-RW	

NOTE

- Some discs and some recording formats cannot be played.
- Non-finalized discs cannot be played.

Files

■ Specifications of supported files

	Sampling frequency	Bit rate	Extension
MP3	32/44.1/48 kHz	48 – 320 kbps	.mp3
WMA	32/44.1/48 kHz	48 – 320 kbps	.wma

■ Maximum number of playable files and folders

Maximum number of folders : 256
Total number of folders and files : 512

NOTE

- Be sure to give files the extension. Files with any other extensions or files with no extensions cannot be played.
- Recordings you have made should only be used for your personal enjoyment, and as per copyright laws may not be used in other ways without permission of the copyright holder.

- Only music files that are not copyright-protected can be played on this unit.
  - Content downloaded from pay sites on the Internet are copyright protected. Also, files encoded in WMA format when ripped from a CD, etc. on a computer may be copyright protected, depending on the computer's settings.
- The maximum number of files and folders that can be played differs depending on conditions such as the length of the file name or folder name or the number of levels in the folder hierarchy.

Playing back a USB flash drives

- This unit is compatible with MP3 ID3-Tag (Ver. 2) standard.
- This unit is compatible with WMA META tags.
- If the image size (pixels) of an album artwork exceeds 500 × 500 (WMA/MP3/Apple Lossless/DSD) or 349 × 349 (MPEG-4 AAC), then music may not be played back properly.

■ Specifications of supported files

	Sampling frequency	Bit rate	Extension
WMA∗1	32/44.1/48 kHz	48 – 320 kbps	.wma
MP3	32/44.1/48 kHz	48 – 320 kbps	.mp3
WAV	32/44.1/48/88.2/ 96/176.4/192 kHz	–	.wav
MPEG-4 AAC∗1	32/44.1/48 kHz	48 – 320 kbps	.aac/.m4a/.mp4
FLAC	32/44.1/48/88.2/ 96/176.4/192 kHz	–	.flac
Apple Lossless∗2	32/44.1/48/88.2/96 kHz	–	.m4a
AIFF	32/44.1/48/88.2/ 96/176.4/192 kHz	–	.aif/.aiff
DSD	2.8/5.6 MHz	–	.dsf/.dff

∗1 Only files that are not protected by copyright can be played on this unit.
Content downloaded from pay sites on the Internet are copyright protected. Also, files encoded in WMA format when ripped from a CD, etc. on a computer may be copyright protected, depending on the computer's settings.

∗2 The Apple Lossless Audio Codec (ALAC) decoder is distributed under the Apache License, Version 2.0 (**http://www.apache.org/licenses/LICENSE-2.0**).

■ Maximum number of playable files and folder

The limits on the number of folders and files that can be displayed by this unit are as follows.

Item \ Media	USB flash drive
Number of folder directory levels *1	16 levels
Number of folders	255
Number of files*2	65025

*1 The limited number includes the root folder.

*2 The allowable number of files may differ according to the USB flash drive capacity and the file size.

NOTE

- Digital audio output stops during playback of the DSD files.

Playback order of music files

When there are multiple folders containing music files, the playback order of folders is automatically set when this unit reads the media. Files in each folder are played in alphabetical order of file name.

CD-R/CD-RW and USB flash drive

For playback of files on CD-R, CD-RW or USB flash drive, files in all folders on the first layer are played first, next on the second layer, then next on the third layer, and so on in this order.

- The playback order displayed on a PC may differ from the actual playback order.
- The playback order with a CD-R/CD-RW may differ, depending on the writing software.
- The playback order may differ from the order in which the folders or files were recorded if you delete or add a folder or file on USB. This occurs because of data recording specifications and is not a malfunction.

About discs and files

Music files recorded on CD-R/-RW and USB flash drive are divided into large segments (folders) and small segments (files).
Files are stored in folders, and folders can be placed for storage in a hierarchy. The unit can recognize up to 16 levels of folders.

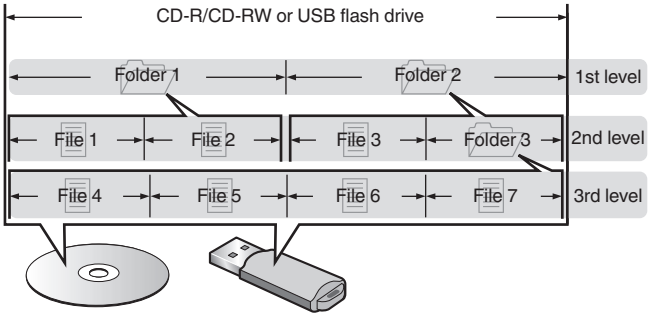

- When writing music files on a CD-R/CD-RW disc, set the writing software's format to "ISO9660". The files may not play properly if they are recorded in other formats. For details, refer to the instructions of your writing software.

Cautions on using media

Loading discs

- Set the disc in the tray label side up.
- Make sure the disc tray is fully open when inserting the disc.
- Place the discs flatly, 12 cm discs in the outer tray guide (Figure 1), 8 cm discs in the inner tray guide (Figure 2).

【Figure 1】

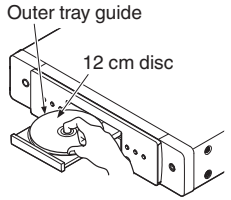

【Figure 2】

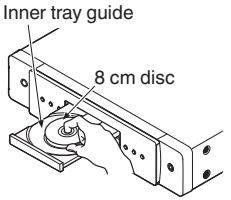

- Place 8 cm discs in the inner tray guide without using an adapter.

NOTE

- Only load one disc at a time. Loading two or more discs can damage the unit or scratch the discs.
- Do not use cracked or warped discs or discs that have been repaired with adhesive, etc.
- Do not use discs on which the sticky part of cellophane tape or labels is exposed or on which there are traces of where labels have been removed. Such discs can get caught inside the player and damage it.
- Do not use discs in special shapes, as they may damage the unit.

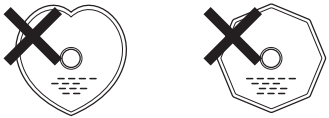

- Do not push the disc tray in by hand when the power is off. Doing so could damage the unit.
- If the unit is left in a room full of smoke from cigarettes, etc., for long periods of time, the surface of the optical pickup may get dirty, preventing it from receiving signals properly.

How to handle media

- Do not get fingerprints, oil or dirt on discs.
- Take special care not to scratch discs when removing them from their cases.
- Do not bend or heat discs.
- Do not enlarge the hole in the center.
- Do not write on the labeled (printed) surface with ball-point pens, pencils, etc., or stick new labels on discs.
- Condensation may form on discs if they are moved suddenly from a cold place (outdoors for example) to a warm place, but do not try to dry discs with a hairdryer, etc.
- Do not eject a USB flash drive or turn off the unit while a USB flash drive is being played. This may result in malfunction or loss of the USB flash drive's data.
- Do not attempt to open or modify a USB flash drive.
- USB flash drive and files can be damaged by static electricity. Do not touch the metal contacts of a USB flash drive with your fingers.
- Do not use warped USB flash drive.
- After use, be sure to remove any disc or USB flash drive, and store it in its proper case, to avoid dust, scratches and deformation.
- Do not store discs in the following places:

  1. Places exposed to direct sunlight for long periods of time
  2. Dusty or humid places
  3. Places exposed to heat from heaters, etc.

Cleaning discs

- If there are fingerprints or dirt on a disc, wipe them off before using the disc.
- Use a commercially available disc cleaning set or a soft cloth to clean discs.

Gently wipe the disc from the inside towards the outside.

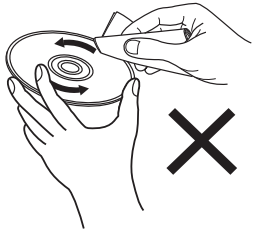

Do not wipe with a circular motion.

NOTE

- Do not use record spray, antistatic agents, benzene, thinner or other solvents.

Explanation of terms

AIFF（Audio Interchange File Format）

This is an uncompressed and lossless format for digital audio. Use AIFF files to burn high-quality audio CDs from imported songs. AIFF files use approximately 10 MB of disk space per minute.

Apple Lossless Audio Codec

This is a codec for lossless audio compression method developed by Apple Inc. This codec can be played back on iTunes, iPod or iPhone. Data compressed to approximately 60 – 70 % can be decompressed to exactly the same original data.

DSD（Direct-Stream Digital）

One of the audio data recording methods, it is the signal aspect used to store audio signals on a super audio CD, and is Δ-Σ modulated digital audio.

FLAC (Free Lossless Audio Codec)

FLAC stands for Free lossless Audio Codec, and is a lossless free audio file format. Lossless means that the audio is compressed without any loss in quality.
The FLAC license is as shown below.

Copyright（C）2000, 2001, 2002, 2003, 2004, 2005, 2006, 2007, 2008, 2009 Josh Coalson

Redistribution and use in source and binary forms, with or without modification, are permitted provided that the following conditions are met:

- Redistributions of source code must retain the above copyright notice, this list of conditions and the following disclaimer.
- Redistributions in binary form must reproduce the above copyright notice, this list of conditions and the following disclaimer in the documentation and/or other materials provided with the distribution.
- Neither the name of the Xiph.org Foundation nor the names of its contributors may be used to endorse or promote products derived from this software without specific prior written permission.

THIS SOFTWARE IS PROVIDED BY THE COPYRIGHT HOLDERS AND CONTRIBUTORS “AS IS” AND ANY EXPRESS OR IMPLIED WARRANTIES, INCLUDING, BUT NOT LIMITED TO, THE IMPLIED WARRANTIES OF MERCHANTABILITY AND FITNESS FOR A PARTICULAR PURPOSE ARE DISCLAIMED. IN NO EVENT SHALL THE FOUNDATION OR CONTRIBUTORS BE LIABLE FOR ANY DIRECT, INDIRECT, INCIDENTAL, SPECIAL, EXEMPLARY, OR CONSEQUENTIAL DAMAGES（INCLUDING, BUT NOT LIMITED TO, PROCUREMENT OF SUBSTITUTE GOODS OR SERVICES; LOSS OF USE, DATA, OR PROFITS; OR BUSINESS INTERRUPTION）HOWEVER CAUSED AND ON ANY THEORY OF LIABILITY, WHETHER IN CONTRACT, STRICT LIABILITY, OR TORT（INCLUDING NEGLIGENCE OR OTHERWISE）ARISING IN ANY WAY OUT OF THE USE OF THIS SOFTWARE, EVEN IF ADVISED OF THE POSSIBILITY OF SUCH DAMAGE.

MP3（MPEG Audio Layer-3）

This is an internationally standardized audio data compression scheme, using the “MPEG-1” video compression standard. It compresses the data volume to about one eleventh its original size while maintaining sound quality equivalent to a music CD.

MPEG (Moving Picture Experts Group), MPEG-2, MPEG-4

These are the names for digital compression format standards used for the encoding of video and audio. Video standards include “MPEG-1 Video”, “MPEG-2 Video”, “MPEG-4 Visual”, “MPEG-4 AVC”. Audio standards include “MPEG-1 Audio”, “MPEG-2 Audio”, “MPEG-4 AAC”.

WMA (Windows Media Audio)

This is audio compression technology developed by Microsoft Corporation.

WMA data can be encoded using Windows Media® Player.

To encode WMA files, only use applications authorized by Microsoft Corporation. If you use an unauthorized application, the file may not work properly.

Sampling frequency

Sampling involves taking a reading of a sound wave (analog signal) at regular intervals and expressing the height of the wave at each reading in digitized format (producing a digital signal).

The number of readings taken in one second is called the “sampling frequency”. The larger the value, the closer the reproduced sound is to the original.

Dynamic range

The difference between the maximum undistorted sound level and the minimum discernible level above the noise emitted by the device.

Bit rate

This is the amount of audio data recorded on a disc that is read in one second.

Finalizing

This process enables DVD/CD recorded with a recorder to be played by other players.

Linear PCM

This is an uncompressed PCM (Pulse Code Modulation) signal. Unlike lossy compression audio sources such as MP3, no audio quality or dynamic range deteriorates.

Specifications

■ Audio section

	[PCM]	[DSD]
• **Analog output**		
Channels:	2-channel	2-channel
Playable frequency range:	2 Hz – 96 kHz (sampling frequency: 192 kHz) 2 Hz – 20 kHz (sampling frequency: 44.1 kHz)	2 Hz – 100 kHz
Playable frequency response:	2 Hz – 50 kHz (-3 dB) (sampling frequency: 192 kHz) 2 Hz – 20 kHz (sampling frequency: 44.1 kHz)	2 Hz – 50 kHz (-3 dB)
S/N:	110 dB	110 dB (Audible range)
Dynamic range:	110 dB (24 bits) 100 dB (16 bits)	110 dB (Audible range)
Harmonic distortion:	0.0010 % (24 bits) 0.0016 % (16 bits)	0.0010 %
• **Output level**		
Signal type:	2.2 V RMS stereo	2.2 V RMS stereo
Headphone output:	163 mW (GAIN: HIGH, 32 Ω/ohms, THD 0.7 % or below) 130 mW (GAIN: MID, 32 Ω/ohms, THD 0.7 % or below) 16 mW (GAIN: LOW, 32 Ω/ohms, THD 0.7 % or below)	163 mW (GAIN: HIGH, 32 Ω/ohms, THD 0.7 % or below) 130 mW (GAIN: MID, 32 Ω/ohms, THD 0.7 % or below) 16 mW (GAIN: LOW, 32 Ω/ohms, THD 0.7 % or below)

- **Optical readout system**

Laser:	AlGaAs
Wave length:	780 nm
Signal type:	16-bit linear PCM
Sampling frequency:	44.1 kHz

- **Digital output**

Coaxial:	0.5 Vp-p / 75 Ω/ohms
Optical :	–19 dBm

- **Digital input**

USB (Front):	USB Type A (USB 2.0 High speed)

■ General

Power supply:	AC 230 V, 50/60 Hz
Power consumption:	32 W
Power consumption in standby mode:	0.3 W
Operating temperature:	+5 ℃ - +35 ℃
Operating humidity:	5 – 90 % (without dew)
Battery type:	Zinc-Carbon (for remote control unit)

For the purpose of improvement, the specifications and design are subject to change without notice.

■ Dimensions (Unit : mm)

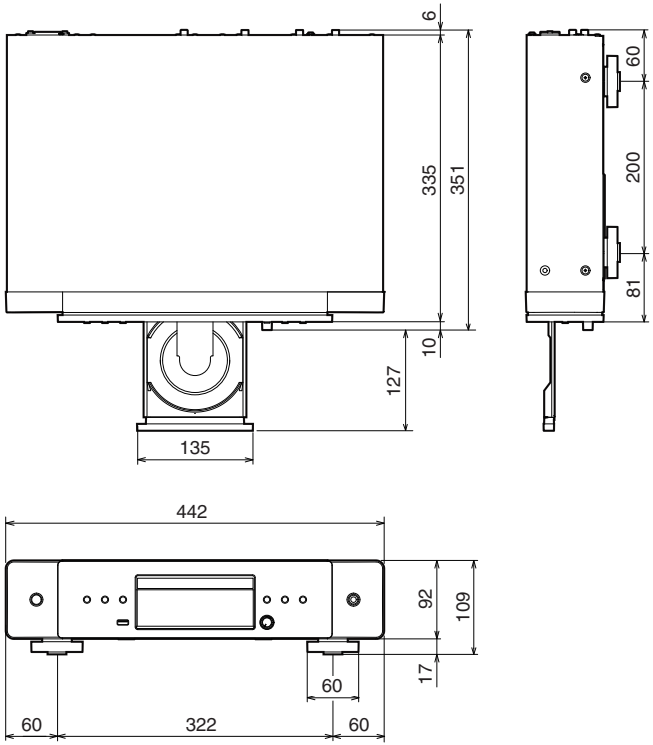

■ Weight : 6.5 kg

Index

A

Amplifier 16, 17
Auto-Standby 38

C

CD 25

D

D/A converter 17
DATA CD 28
Display 8
Display's brightness 24

F

Front panel 6

M

Menu map 34

P

Program playback 27

R

Rear panel 9
Remote control unit 10

T

Timer device 20
Tips 40
Troubleshooting 41

U

USB flash drive 18, 31

marantz

3520 11062 00AS