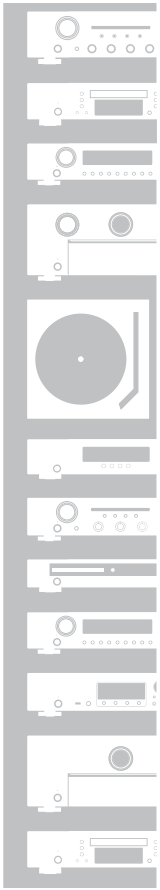

marantz®

Network Audio Player

NA6006

Owner's Manual

Accessories 7
Inserting the batteries 8
Operating range of the remote control unit 8
Features 9
High quality sound 9
High performance 9
Part names and functions 12
Front panel 12
Rear panel 14
Remote control unit 16

Connections

Connecting an amplifier 21
Connecting to a device with digital audio input connectors 22
Connecting to a device with digital audio output connectors 23
Connecting a USB memory device to the USB port 24
Connecting to a home network (LAN) 25
Wired LAN 25
Wireless LAN 26
Connecting an external control device 27
REMOTE CONTROL connectors 27
Connecting the power cord 28

Playback

Basic operation **30**
- Turning the power on 30
- Switching the power to standby 30
- Selecting the input source 31

Listening to Internet Radio **32**
- Listening to Internet Radio 33

Playing back files stored on PC or NAS **34**
- Playing back files stored on PC or NAS 35

Playing a USB memory device **37**
- Playing files stored on USB memory devices 38

Listening to music on a Bluetooth device **40**
- Listening to music on a Bluetooth device 41
- Pairing with other Bluetooth devices 42
- Reconnecting to this unit from a Bluetooth device 43

Getting the HEOS App **44**
- HEOS Account 45
- Playing from streaming music services 46
- Listening to the same music in multiple rooms 49

Using as a D/A converter **53**
- Connect and playback from a digital device (Optical) 54

AirPlay function **55**
- Playing songs from your iPhone, iPod touch or iPad 56
- Playing iTunes music with this unit 56
- Perform iTunes playback operations with the remote control unit of this unit 57
- Play a song from your iPhone, iPod touch or iPad on multiple synced devices (AirPlay 2) 58

Spotify Connect function **59**
- Playing Spotify music with this unit 59

Convenience functions **60**
- Adding to HEOS Favorites 60
- Playing back HEOS Favorites 61
- Deleting a HEOS Favorites 61
- Switching the display's brightness 61
- Using the sleep timer 62
- Stopping digital outputs 62

Settings

Menu map **63**
- Menu operation 68

Inputting characters **69**
- Using the number buttons 69
- Using the cursor buttons 70

Audio **71**
- Filter 71
- Lock Range 71
- Variable Out 72
- Volume Limit 72
- Phones 72
- H/P Amplifier Gain 73

General **74**
- Language 74
- Auto-Standby 74
- Usage Data 75
- Firmware 75
- Information 78
- Reset 78

Network **79**
- Network Information 79
- Wi-Fi 79
- Bluetooth 79
- Network Control 80
- Friendly Name 80
- Connection 81
- Settings 84
- Diagnostics 85

HEOS Account **86**
You have not signed in 86
You have already signed in 86
Switching the function of the volume buttons on the remote control **87**
Setting the remote control operation mode to network audio player operation mode 88
Setting the remote control operation mode to amplifier operation mode 88

Tips

Contents **89**
Tips **90**
Troubleshooting **92**
Power does not turn on / Power is turned off 93
Operations cannot be performed through the remote control unit 94
Display on this unit shows nothing 94
No sound comes out 95
Sound is interrupted or noise occurs 96
Desired sound does not come out 97
AirPlay cannot be played back 97
USB memory devices cannot be played back 99
Bluetooth cannot be played back 100
The Internet radio cannot be played back 101
Music files on PC or NAS cannot be played back (Music server) 102
Various online services cannot be played 103
Cannot connect to a wireless LAN network 103
Audio from digital devices cannot be played back (Optical) 104
Update/upgrade error messages 105
Resetting network settings **106**

Appendix

Playing back a USB memory devices	107
D/A converter	108
Playing back a Bluetooth device	109
Playing back files stored on a PC and NAS	110
Playing back Internet Radio	111
Explanation of terms	112
Trademark information	115
Specifications	116
Index	121
License	123

Thank you for purchasing this Marantz product.
To ensure proper operation, please read this owner's manual carefully before using the product.
After reading this manual, be sure to keep it for future reference.

Accessories

Check that the following parts are supplied with the product.

Quick Start Guide	Safety Instructions	Cautions on Using Batteries	Notes on radio
Power cord	Remote control unit (RC005NA)	R03/AAA batteries	Audio cable
Remote connector cable	External antennas for Bluetooth/wireless connectivity		

Inserting the batteries

1 **Remove the rear lid in the direction of the arrow and remove it.**

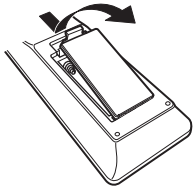

2 **Insert two batteries correctly into the battery compartment as indicated.**

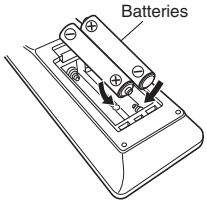

3 **Put the rear cover back on.**

NOTE

- To prevent damage or leakage of battery fluid:
  - Do not use a new battery together with an old one.
  - Do not use two different types of batteries.
- Remove the batteries from the remote control unit if it will not be in use for long periods.
- If the battery fluid should leak, carefully wipe the fluid off the inside of the battery compartment and insert new batteries.

Operating range of the remote control unit

Point the remote control unit at the remote sensor when operating it.

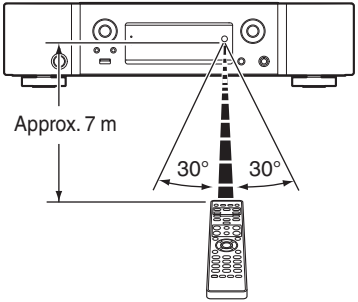

Features

High quality sound

- **Peripheral circuitry off function minimizes audio output signal interference**
  This unit has functions to turn off the Wi-Fi, Bluetooth, headphones output circuit, variable audio output circuit and digital output circuit and clear the display to prevent noise from surrounding circuits from entering the audio signal output from the unit.
- **Low noise amp due differential input HDAM, and equipped with a low distortion filter circuit due to high speed HDAM®SA2 delivery amp**
- **Double-layered chassis**
- **Marantz unique filtering technology (MMDF: Marantz Musical Digital Filtering)**
  This unit is equipped with oversampling and digital filter functions using an original algorithm created by Marantz. The unit supports PCM signal. Toggle between the two types to suit your preferences.
- **High grade headphone circuit**
  The high-grade headphone circuit incorporates HDAM®SA2 amplifier to enable headphone listening of high quality sound reproduction, late at night or in other such situations.

High performance

- **Support for High Quality Audio playback via USB and networks**
  This unit supports the playback of high resolution audio formats such as DSD (2.8/5.6 MHz) and WAV/FLAC/Apple Lossless Audio Codec (ALAC) files up to 192 kHz/24 bits.
- **Can be used as a D/A convertor (Optical)**
  Digital audio signals input from an external device into this unit can be converted and output as analog signals using this unit's D/A converter.

- **The device is equipped with a AirPlay® function in addition to network functions such as Internet radio etc.**
  You can enjoy a wide variety of content, including listening to Internet Radio, playing audio files stored on your PC. This unit also supports Apple AirPlay which lets you stream your music library from an iPhone®, iPad®, iPod touch® or iTunes®.

- **Supports AirPlay 2® wireless audio**
  Sync multiple AirPlay 2 compatible devices/speakers for simultaneous playback.
  This unit supports AirPlay 2 and requires iOS 11.4 or later.

- **Wireless connection with Bluetooth devices can be carried out easily**
  You can enjoy music simply by connecting wirelessly with your smartphone, tablet, PC, etc.

- **Support for Gapless playback**
  Playback with no gap between music files.
  (for WAV/FLAC/Apple Lossless/DSD only)

- **Compatible with the HEOS App* for performing basic operations of the unit with an iPad, iPhone or Android™ devices (Google, Amazon Kindle Fire)**
  * Download the appropriate HEOS App for your iOS or Android devices. This unit needs to be connected to the same LAN or Wi-Fi (wireless LAN) network that the iPhone or iPod touch is connected to.

- **HEOS provides streaming music from your favorite online music sources**

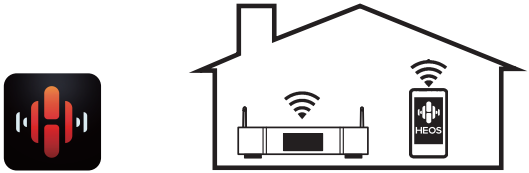

HEOS wireless multi-room sound system that enables you to enjoy your favorite music anywhere and everywhere around your home. By utilizing your existing home network and the HEOS App (available for iOS, Android and Amazon devices), you can explore, browse, and play music from your own music library or from many online streaming music services.

When multiple HEOS devices are connected to the same network, HEOS devices can be grouped to play back the same music on all devices simultaneously, or different music can be played on each separate HEOS device.

- **Headphone Amplifier Gain selector function**
  This unit has a gain control function with three levels that can be switched according to the characteristics of the connected headphones.

- **Equipped with analog audio output connectors (VARIABLE)**
  In addition to the normal analog audio output connectors (FIXED), this unit is equipped with analog audio output connectors (VARIABLE) that allow you to adjust the volume of the audio signal output from this unit. These can be connected to the Power Amplifier to adjust the volume.

- **OLED (Organic Light Emitting Diode) display that can display 3 lines**

- **Equipped with auto standby mode function that reduces power consumption**

Part names and functions

Front panel

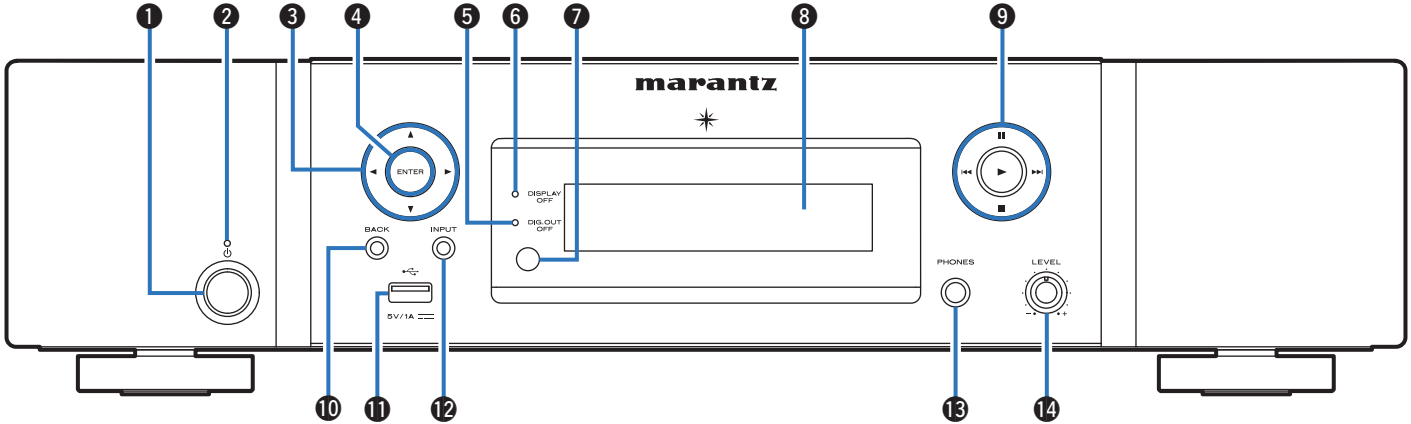

❶ **Power operation button (⏻)**
This turns the power on/off (standby). (☞ p. 30)

❷ **Power indicator**
This is lit as follows according to the power status:
- Off: Power on
- Red: Normal standby
- Orange: Standby when the following settings are configured
  - When “Network Control” is set to “On” (☞ p. 80)

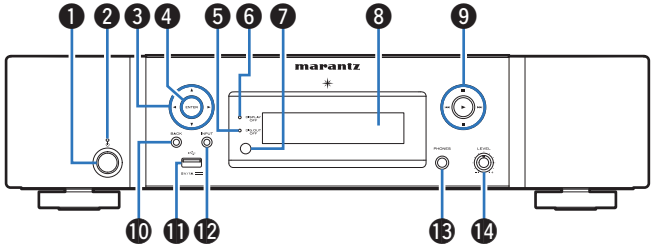

❸ **Cursor buttons (△▽◁ ▷)**
These select items.

❹ **ENTER button**
This determines the selection.

❺ **Digital output off indicator (DIG. OUT OFF)**
This indicator lights up when the digital output setting is set to off. (☞ p. 62)

❻ **DISPLAY OFF indicator**
This indicator lights up when the display is off. (☞ p. 61)

❼ **Remote control sensor**
This receives signals from the remote control unit. (☞ p. 8)

❽ **Display**
This displays various pieces of information.

❾ **System buttons**
These perform playback related operations.
- Play button (▶)
- Pause button (❚❚)
- Skip buttons (❙◀◀, ▶▶❙)
- Stop button (■)

❿ **BACK button**
Returns to the previous item.

⓫ **USB port (⭠)**
This is used to connect USB storages (such as USB memory devices). (☞ p. 24)

⓬ **INPUT button**
This selects the input source. (☞ p. 31)

⓭ **Headphones jack (PHONES)**
Used to connect headphones.

NOTE
- To prevent hearing loss, do not raise the volume level excessively when using headphones.

⓮ **Headphone volume control knob (LEVEL)**
Adjusts the headphone volume.

Rear panel

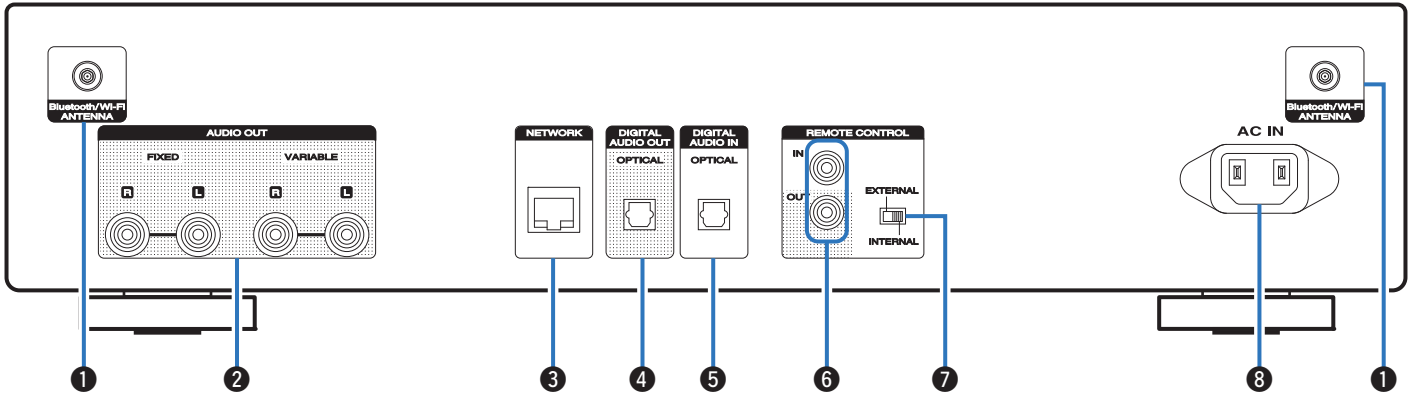

For details, see the next page.

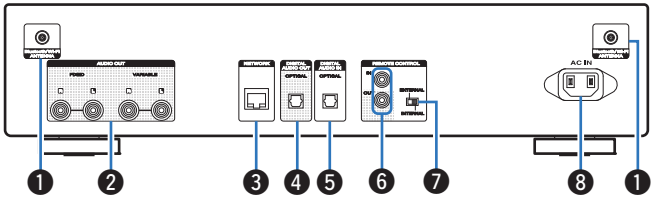

❶ **Bluetooth/wireless LAN antenna connectors**

Used to connect the included external antennas for Bluetooth/wireless connectivity when connecting to a network via wireless LAN, or when connecting to a handheld device via Bluetooth. (☞ p. 26)

① Place the external antennas for Bluetooth/wireless connectivity evenly over the screw terminal of rear.
② Turn clockwise until the antennas is fully connected.
③ Rotate the antenna upwards for best reception.

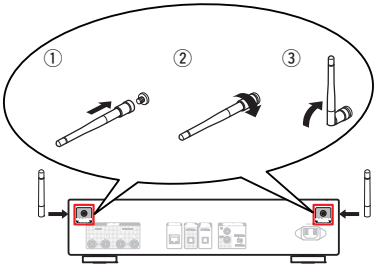

❷ **AUDIO OUT connectors**

Used to connect devices equipped with analog audio inputs connectors or an external power amplifier. (☞ p. 21)

❸ **NETWORK connector**

Used to connect to a LAN cable when connecting to a wired LAN network. (☞ p. 25)

❹ **DIGITAL AUDIO OUT connector**

Used to connect an AV receiver or D/A converter that has a digital input connectors. (☞ p. 22)

❺ **DIGITAL AUDIO IN connector**

Connecting to a device with digital audio output connectors. (☞ p. 23)

❻ **REMOTE CONTROL connectors**

Used to connect to a Marantz audio device that is compatible with the remote control function. (☞ p. 27)

❼ **EXTERNAL/INTERNAL switch**

Turn this switch to “EXTERNAL” to operate the unit by pointing the remote control at the amplifier connected to this unit using the remote control connection. (☞ p. 27)

❽ **AC inlet (AC IN)**

Used to connect the power cord. (☞ p. 28)

Remote control unit

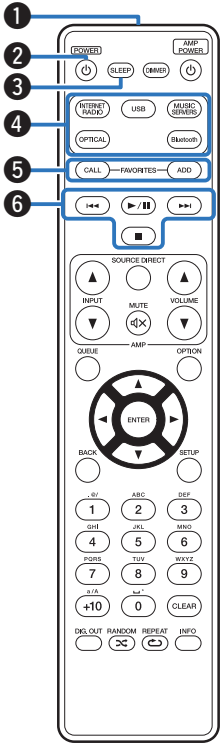

■ Operating this unit

❶ **Remote control signal transmitter**
This transmits signals from the remote control unit. (☞ p. 8)

❷ **Power operation button (POWER ⏻)**
This turns the power on/off (standby). (☞ p. 30)

❸ **SLEEP button**
This sets the sleep timer. (☞ p. 62)

❹ **Input source select buttons**
These select the input source. (☞ p. 31)

❺ **FAVORITES CALL / ADD buttons**
This allows you to register content to “HEOS Favorites” and call registered content.

- “Adding to HEOS Favorites” (☞ p. 60)
- “Playing back HEOS Favorites” (☞ p. 61)

❻ **System buttons**
These perform playback related operations.

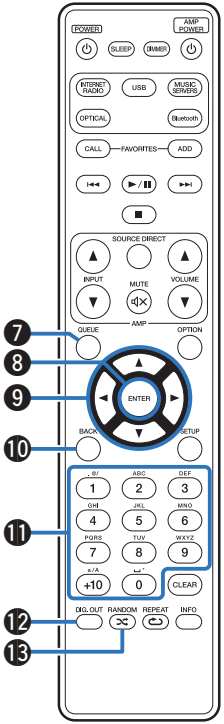

❼ QUEUE button

This displays the queue.

- “Listening to Internet Radio” (☞ p. 32)
- “Playing back files stored on PC or NAS” (☞ p. 34)
- “Playing a USB memory device” (☞ p. 37)

❽ ENTER button

This determines the selection.

❾ Cursor buttons (△▽◁ ▷)

These select items.

❿ BACK button

Returns to the previous item.

⓫ Number/letter buttons (0 – 9, +10)

These enter letters or numbers into the unit. (☞ p. 69)

⓬ Digital audio output switch button (DIG. OUT)

This switches the digital audio out on/off. (☞ p. 62)

⓭ RANDOM button (⤮)

Switches the random playback.

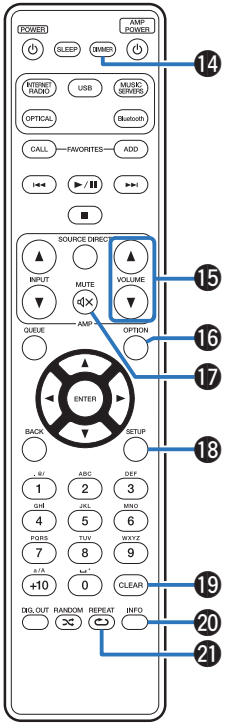

⑭ DIMMER button

Adjust the display brightness of this unit. (☞ p. 61)

⑮ VOLUME buttons (▲▼)

These adjust the volume of the audio signal output from the analog audio output terminals (VARIABLE) of this unit. (☞ p. 87)

⑯ OPTION button

- This displays the option menu on the display.

- An option menu is not displayed for some input sources.

⑰ MUTE button (🔇)

This mutes the audio signal output from the analog audio output terminals (VARIABLE) of this unit. (☞ p. 87)

⑱ SETUP button

The setting menu is displayed on the display. (☞ p. 63)

⑲ CLEAR button

This cancels the settings.

⑳ Information button (INFO)

This switches the track information shown in the display during playback.

㉑ REPEAT button (🔁)

Switches the repeat playback.

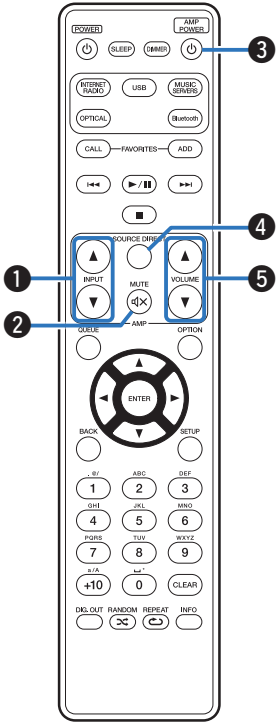

■ Amplifier operations

A Marantz amplifier can be operated.

❶ **INPUT buttons (▲▼)**

❷ **MUTE button (🔇)**

❸ **Power operation button (AMP POWER ⏻)**

❹ **SOURCE DIRECT button**

❺ **VOLUME buttons (▲▼)**

- The remote control may not operate some products.
- ❷ and ❺ can be operated when the remote control operation mode is set to amplifier operation mode (factory default setting). (☞ p. 87)

Contents

Connecting an amplifier	21
Connecting to a device with digital audio input connectors	22
Connecting to a device with digital audio output connectors	23
Connecting a USB memory device to the USB port	24
Connecting to a home network (LAN)	25
Connecting an external control device	27
Connecting the power cord	28

NOTE

- Do not plug in the power cord until all connections have been completed.
- Do not bundle power cords with connection cables. Doing so can result in humming or noise.

Cables used for connections

Provide necessary cables according to the devices you want to connect.

Audio cable (supplied)	
Remote connector cable (supplied)	
Optical cable (Sold separately)	
LAN cable (Sold separately)	

Connecting an amplifier

In addition to the normal analog audio output connectors (FIXED) this unit has analog audio output connectors (VARIABLE) that allow you to adjust the volume of the audio signal output from this unit. Connect the power amplifier to the analog audio output connectors (VARIABLE) and press the VOLUME ▲▼ buttons on the remote control to adjust the volume of the audio signal output from this unit.

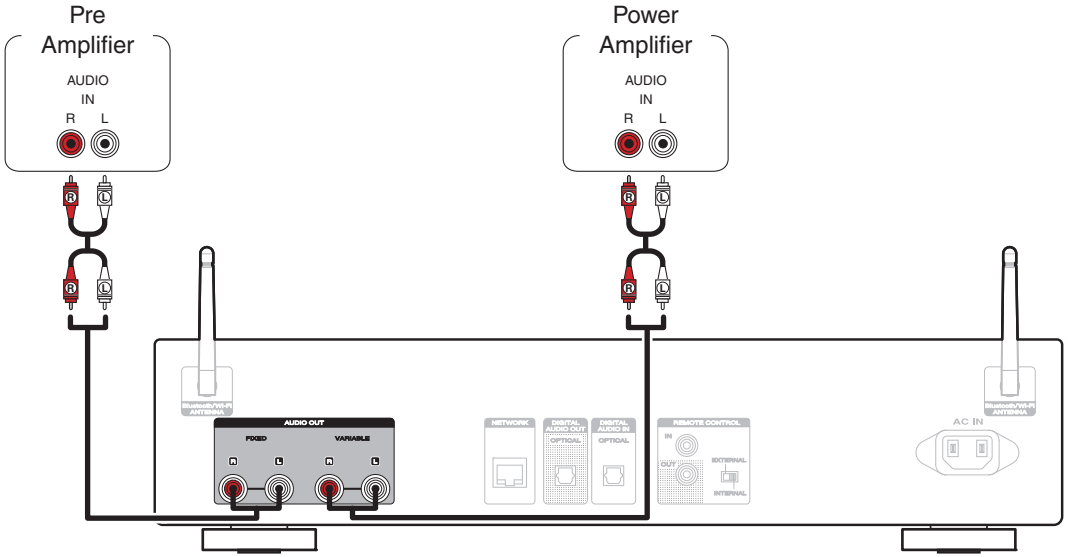

NOTE

- To adjust the volume of the audio signal output from the analog audio output connectors (VARIABLE) of this unit using the remote control, set the remote control operation mode of the volume buttons to network audio player operation mode. (☞ p. 87)
- An audio signal is not output from the variable audio output connectors (VARIABLE) when “Variable Out” is set to “Off” in the menu. (☞ p. 72)
- Do not connect a power amplifier to the analog audio output connectors (FIXED). Connecting a power amplifier may cause damage to the speakers.

Connecting to a device with digital audio input connectors

You can enjoy digital audio playback by connecting an AV receiver or D/A converter that has a digital audio connector to this unit.

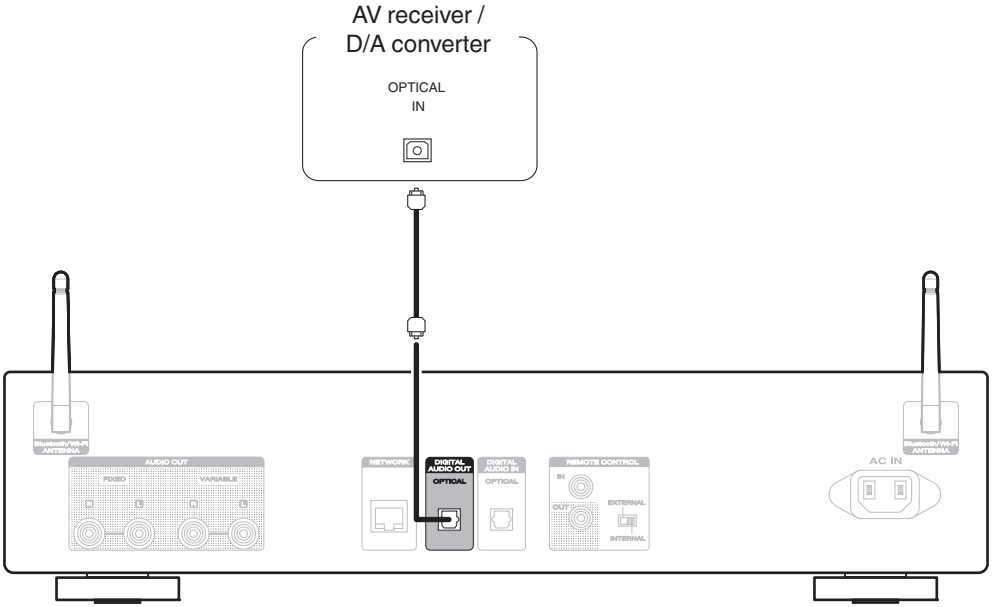

NOTE

- Digital audio output stops during playback of the DSD files via USB and networks.
- Use the DIG. OUT button to set the digital audio output on or off. (☞ p. 62)

Connecting to a device with digital audio output connectors

Use this connection to input digital audio signals to this unit, and convert the signals for playback using the D/A converter of this unit. (☞ p. 53)

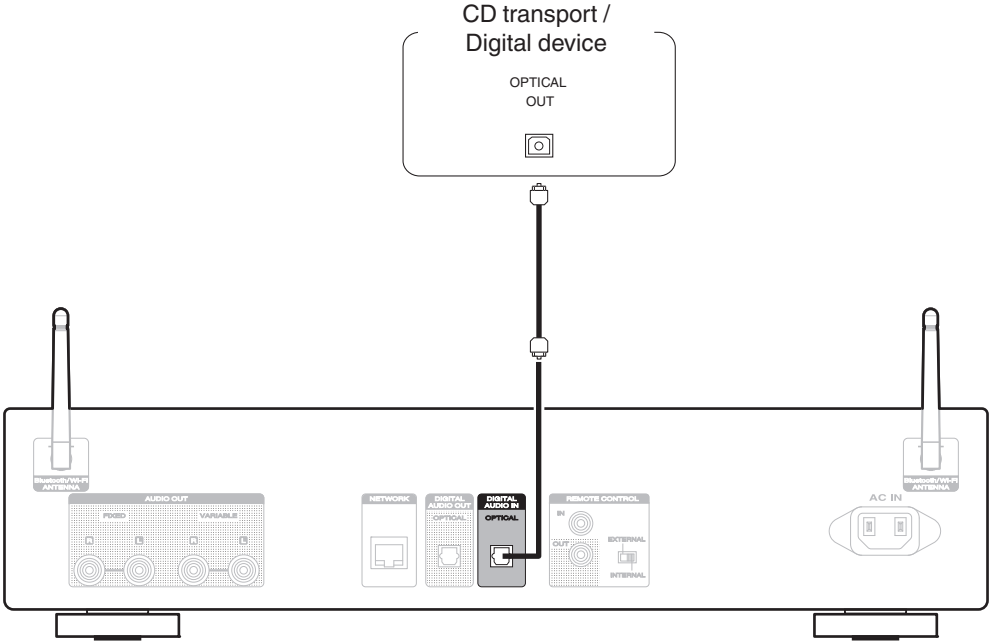

■ Specifications of supported audio formats

See “D/A converter” (☞ p. 108).

Connecting a USB memory device to the USB port

For operating instructions see “Playing a USB memory device”. (☞ p. 37)

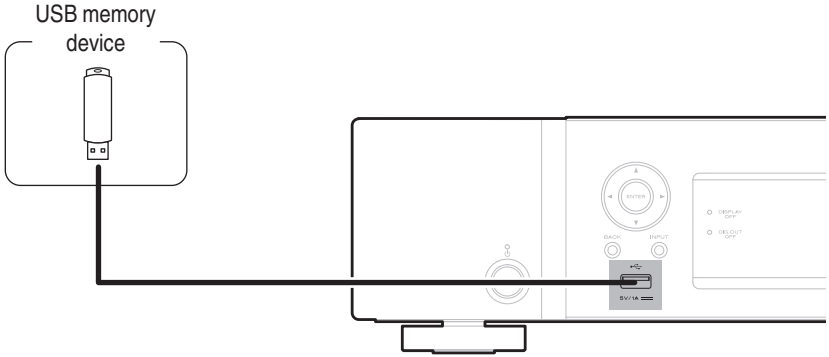

- Marantz does not guarantee that all USB memory devices will operate or receive power. When using a portable USB hard disk drive (HDD) which came with an AC adapter, use that device’s supplied AC adapter.

NOTE

- USB memory devices will not work via a USB hub.
- Do not use an extension cable when connecting a USB memory device. This may cause radio interference with other devices.

Connecting to a home network (LAN)

This unit can connect to a network using a wired LAN or wireless LAN.

You can connect this unit to your home network (LAN) to enable various types of playback and operations as described below.

- Playback of network audio such as Internet Radio and from your media server(s)
- Playback of streaming music services
- Using the Apple AirPlay function
- Operation on this unit via the network
- Operation with the HEOS wireless multi-room sound system
- Firmware Update

For connections to the Internet, contact an ISP (Internet Service Provider) or a computer shop.

Wired LAN

To make connections via wired LAN, use a LAN cable to connect the router to this unit as shown in the figure below.

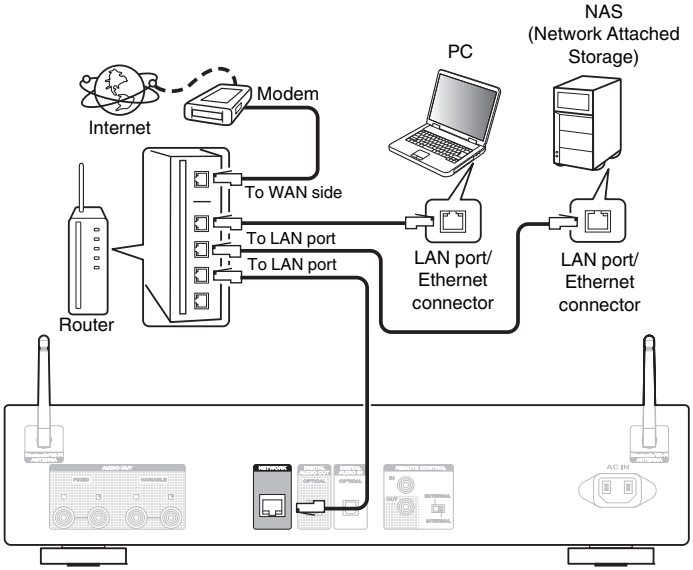

Wireless LAN

When connecting to the network via wireless LAN, connect the external antennas for Bluetooth/wireless connectivity connection to the rear panel and stand them upright.
See “Wi-Fi Setup” on how to connect to a wireless LAN router.
(☞ p. 81)

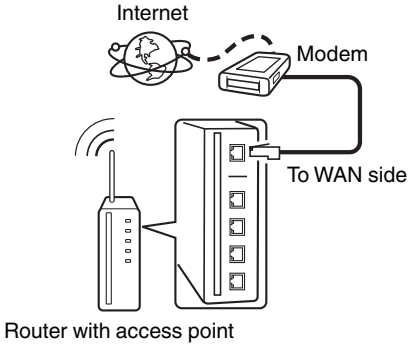

- When using this unit, we recommend you use a router equipped with the following functions:
  - Built-in DHCP server
    This function automatically assigns IP addresses on the LAN.
  - Built-in 100BASE-TX switch
    When connecting multiple devices, we recommend a switching hub with a speed of 100 Mbps or greater.
- Only use a shielded STP or ScTP LAN cable (readily available at electronics stores). (CAT-5 or greater recommended)
- The normal shielded-type LAN cable is recommended. If a flat-type cable or unshielded-type cable is used, other devices could be affected by noise.
- When using this unit connected to a network with no DHCP function, configure the IP address, etc. in “Network”. (☞ p. 79)

NOTE

- The types of routers that can be used depend on the ISP. Contact your ISP or a computer shop for details.
- This unit is not compatible with PPPoE. A PPPoE compatible router is required if your contracted line is not set using PPPoE.
- Do not connect a NETWORK connector directly to the LAN port/ Ethernet connector on your computer.
- Various online services may be discontinued without prior notice.
- Do not carry this unit by the antenna.

Connecting an external control device

REMOTE CONTROL connectors

If this unit is connected to a Marantz amp, the amp can be controlled via this unit using the HEOS App. Also, remote control signals received by the amp can be used to control this unit. Next, configure the “Connection” and “Setting”.

■ Connection

Use the supplied remote connector cable to connect the REMOTE CONTROL IN connector of this unit to REMOTE CONTROL OUT connector of the amplifier.

■ Setting

Turn the EXTERNAL/INTERNAL switch on the unit to “EXTERNAL”.

- This setting will disable remote sensor reception of this unit.
- To operate the unit, point the remote control at the remote sensor of the amplifier.

- To use this unit by itself without connecting an amplifier, turn the switch to “INTERNAL”.

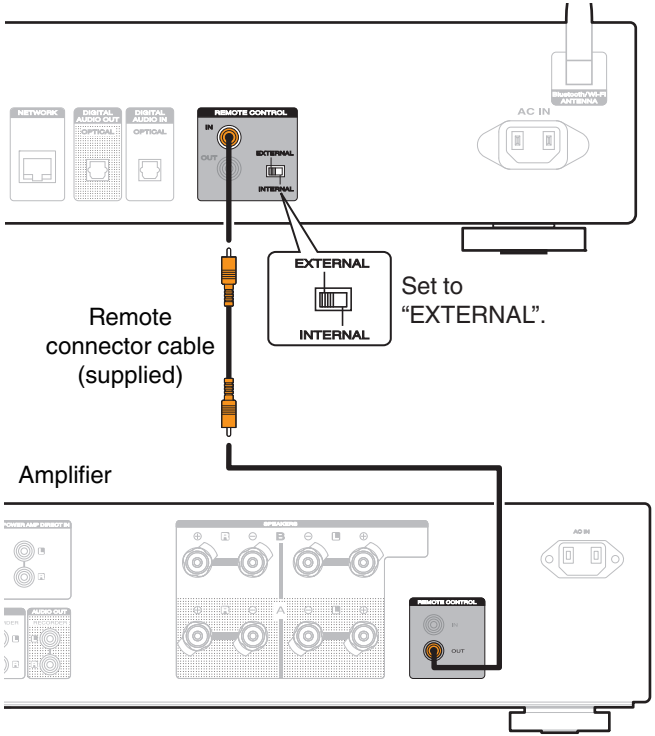

Connecting the power cord

After completing all the connections, insert the power plug into the power outlet.

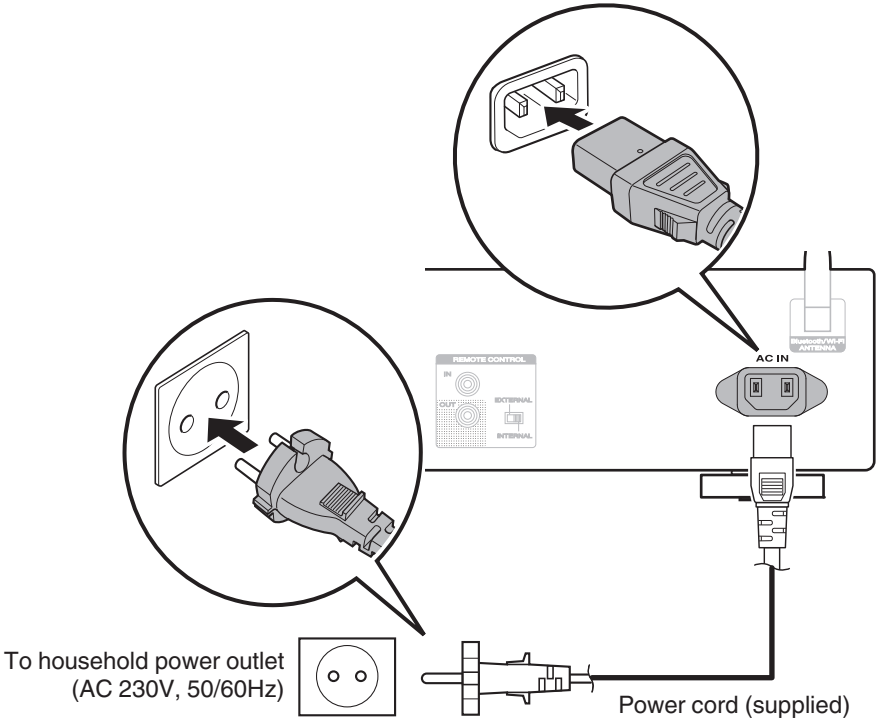

■ Contents

Basic operation

Turning the power on	30
Switching the power to standby	30
Selecting the input source	31

Playback network audio/service

Listening to Internet Radio	32
Playing back files stored on PC or NAS	34
Getting the HEOS App	44
AirPlay function	55
Spotify Connect function	59

Playback a device

Playing a USB memory device	37
Listening to music on a Bluetooth device	40
Using as a D/A converter	53

Convenience functions

Adding to HEOS Favorites	60
Playing back HEOS Favorites	61
Deleting a HEOS Favorites	61
Switching the display's brightness	61
Using the sleep timer	62
Stopping digital outputs	62

Basic operation

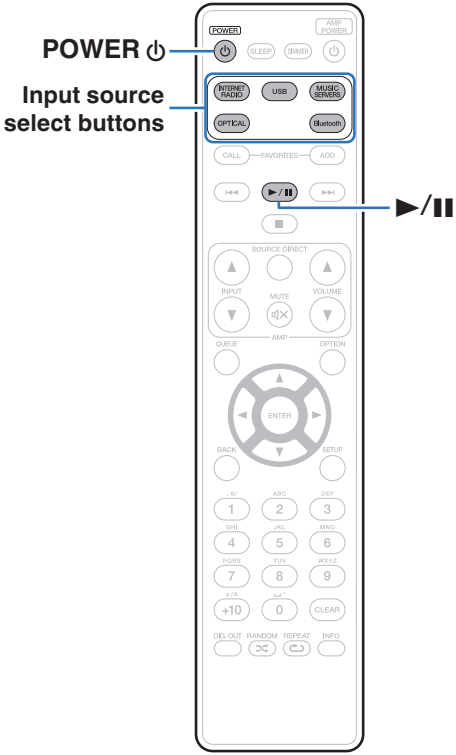

Turning the power on

1 **Press POWER ⏻ to turn on power to the unit.**

The power indicator turns off.

- You can also press ⏻ on the main unit to turn on power from standby mode.
- You can also press ►/❚❚ to turn on power from standby mode.

Switching the power to standby

1 **Press POWER ⏻.**

The unit switches to standby mode.

- You can also switch the power to standby by pressing ⏻ on the main unit.

NOTE

- Power continues to be supplied to some of the circuitry even when the power is in the standby mode. When leaving home for long periods of time or when going on vacation, unplug the power cord from the power outlet.

Selecting the input source

1 Press the input source select button to be played back.

The selected input source appears on the display.

- You can also select the input source by pressing INPUT on the main unit.

Listening to Internet Radio

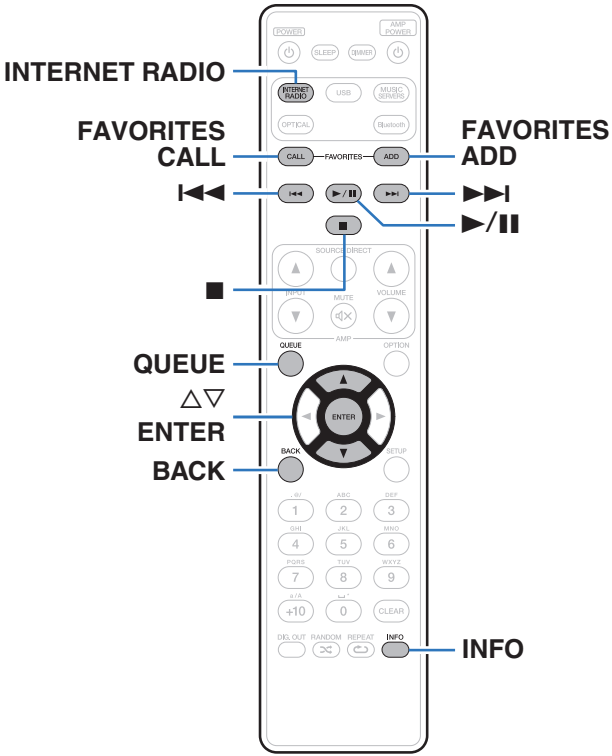

- Internet Radio refers to radio broadcasts distributed over the Internet. Internet Radio stations from around the world can be received.
- The Internet Radio station list on this unit the database service provided by TuneIn Radio service.
- The audio format types and specifications supported by this unit for playback are as follows.
  See “Playing back Internet Radio” (☞ p. 111) for details.
  - **WMA**
  - **MP3**
  - **MPEG-4 AAC**

Listening to Internet Radio

1 **Press INTERNET RADIO.**

2 **Select the station you want to play.**

Operation buttons	Function
▶/❚❚*	Playback / Pause
■	Stop
⏮ ⏭ *	Skip to previous track / Skip to next track
△ ▽	Select the item
ENTER	Enter the selected item / Playback
BACK	Moving up a level in the hierarchy
FAVORITES CALL	Call from the “HEOS Favorites” (☞ p. 61)
FAVORITES ADD	Adding to “HEOS Favorites” (☞ p. 60)
INFO	Switching the radio station name and file format
QUEUE	This displays the queue

* Enabled when playing Podcasts.

- Any characters that cannot be displayed are replaced with “.” (period).

NOTE

- The radio station database service may be suspended or be otherwise unavailable without notice.

Playing back files stored on PC or NAS

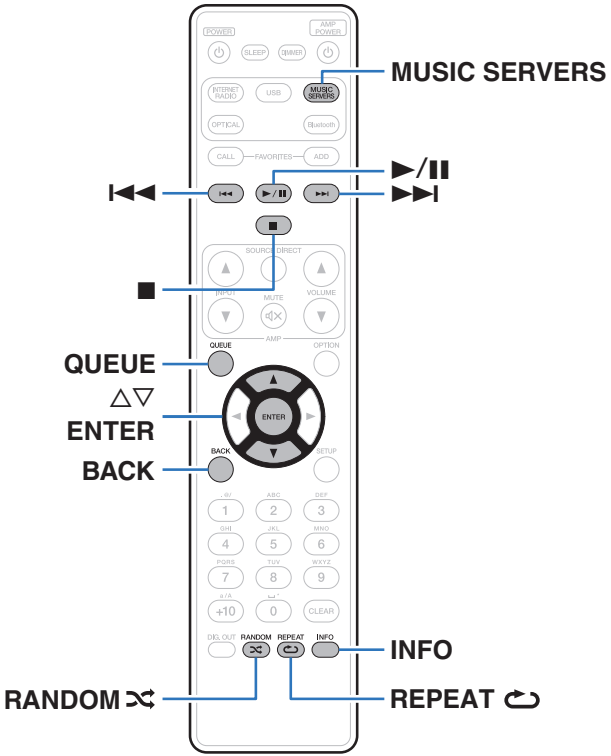

- This unit can play back music files and playlists (m3u, wpl) from DLNA compatible servers including PCs and NAS devices on your network.
- The audio format types and specifications supported by this unit for playback are as follows.
  See “Playing back files stored on a PC and NAS” (☞ p. 110) for details.
  - **WMA**
  - **MP3**
  - **WAV**
  - **MPEG-4 AAC**
  - **FLAC**
  - **Apple Lossless**
  - **DSD**

Playing back files stored on PC or NAS

Use this procedure to play music files or playlists stored on DLNA files servers on your local network.

1 **Press MUSIC SERVERS to switch the input source to "Music Servers".**

2 **Select the name of your networked PC or NAS (Network Attached Storage) server.**

3 **Browse the music on your PC/NAS and select something to play.**

- When you select something to play you will be asked how you want to queue up your music.

Play Now:	Inserts the item into the queue after the currently playing track and plays the selected item immediately.
Play Now & Replace Queue:	Clears the queue and plays the selected item immediately.
Play Next:	Inserts the item into the queue after the current song and plays it when the current song ends.
Add to End of Queue:	Adds the item to the end of the queue.

4 **Use △▽ to select the “Play Now” or “Play Now & Replace Queue”, then press ENTER.**

Playback starts.

Operation buttons	Function
▶/II	Playback / Pause
■	Stop
I◀◀ ▶▶I	Skip to previous track / Skip to next track
△ ▽	Select the item
ENTER	Enter the selected item
BACK	Moving up a level in the hierarchy
REPEAT ⟲	Repeat playback • Switching between Single-track repeat and All-track repeat.
RANDOM ⤮	Random playback
INFO	Switching the album name and file format.
QUEUE	This displays the queue

NOTE

- When playing back music files with your PC or NAS connected through wireless LAN, audio may be interrupted depending on your wireless LAN environment. In this case, connect using a wired LAN.
- The order in which the tracks/files are displayed depends on the server specifications. If the tracks/files are not displayed in alphabetical order due to the server specifications, searching by the first letter may not work properly.

Playing a USB memory device

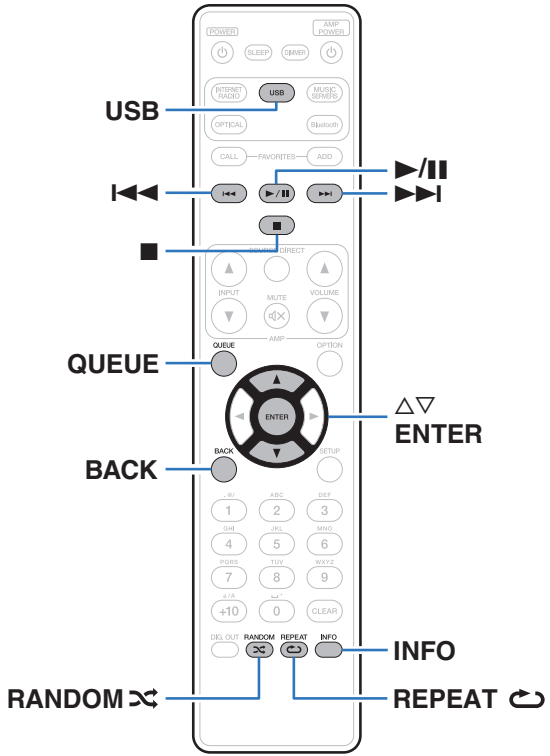

- Playing back music files stored on a USB memory device.
- Only USB memory devices conforming to mass storage class standards can be played on this unit.
- This unit is compatible with USB memory devices in “FAT16” or “FAT32” format.
- The audio format types and specifications supported by this unit for playback are as follows.
  See “Playing back a USB memory devices” (☞ p. 107) for details.
  - **WMA**
  - **MP3**
  - **WAV**
  - **MPEG-4 AAC**
  - **FLAC**
  - **Apple Lossless**
  - **DSD**

Playing files stored on USB memory devices

1 **Insert a USB memory device into the front panel's USB port.**

2 **Press USB to switch the input source to "USB Music".**

3 **Select the name of this unit.**

4 **Browse the music on your USB memory device and select something to play.**

- When you select something to play you will be asked how you want to queue up your music.

Play Now:	Inserts the item into the queue after the currently playing track and plays the selected item immediately.
Play Now & Replace Queue:	Clears the queue and plays the selected item immediately.
Play Next:	Inserts the item into the queue after the current song and plays it when the current song ends.
Add to End of Queue:	Adds the item to the end of the queue.

5 **Use △▽ to select the "Play Now" or "Play Now & Replace Queue", then press ENTER.**

Playback starts.

Operation buttons	Function
▶/II	Playback / Pause
■	Stop
I◀◀ ▶▶I	Skip to previous track / Skip to next track
△ ▽	Select the item
ENTER	Enter the selected item / Playback
BACK	Moving up a level in the hierarchy
REPEAT ⟲	Repeat playback • Switching between Single-track repeat and All-track repeat.
RANDOM ⤮	Random playback
INFO	Switching the album name and file format.
QUEUE	This displays the queue

NOTE

- Note that Marantz will accept no responsibility whatsoever for any problems arising with the data on a USB memory device when using this unit in conjunction with the USB memory device.
- When a USB memory device is connected to this unit, the unit loads all of the files on the USB memory device. Loading may take a while if the USB memory device contains a large number of folders and/or files.

Listening to music on a Bluetooth device

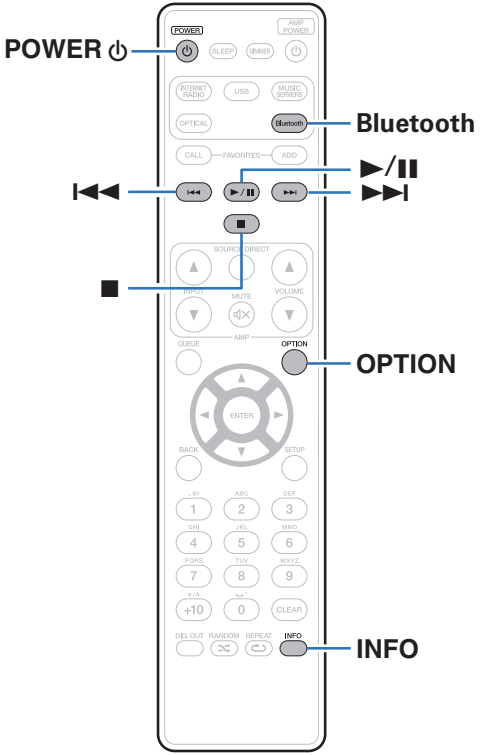

Music files stored on Bluetooth devices such as smartphones, digital music players, etc. can be enjoyed on this unit by pairing and connecting this unit with the Bluetooth device.

Communication is possible up to a range of about 30 m.

NOTE

- To play back music from a Bluetooth device, the Bluetooth device needs to support the A2DP profile.

Listening to music on a Bluetooth device

In order to enjoy music from a Bluetooth device on this unit, the Bluetooth device must first be paired with this unit.

Once the Bluetooth device has been paired, it does not need to be paired again.

1 Prepare for playback.

① Connect the supplied external antennas for Bluetooth/wireless connectivity to the Bluetooth/wireless LAN antenna connectors on the rear panel. (☞ p. 15)

② Press POWER ⏻ to turn on power to the unit.

2 Press Bluetooth.

When using for the first time, the unit will go into the pairing mode automatically and “Bluetooth Pairing Mode” will appear on the display of the unit.

3 Activate the Bluetooth settings on your mobile device.

4 Select this unit when its name appears in the list of devices displayed on the screen of the Bluetooth device.

Connect to the Bluetooth device while “Bluetooth Pairing Mode” is being displayed on the display of the unit.
Perform the connection with the Bluetooth device close to the unit (about 1 m).

5 Play music using any app on your Bluetooth device.

- The Bluetooth device can also be operated with the remote control of this unit.
- The next time the Bluetooth button is pressed on the remote control unit, this unit automatically connects to the last Bluetooth device that was connected.

Operation buttons	Function
▶/II	Playback / Pause
■	Stop
I◀◀ ▶▶I	Skip to previous track / Skip to next track
INFO	Switching the Bluetooth device name and Album name.

Pairing with other Bluetooth devices

Pair a Bluetooth device with this unit.

1 Activate the Bluetooth settings on your mobile device.

2 Press and hold Bluetooth on the remote control unit for at least 3 seconds.

This unit will go into the pairing mode.

3 Select this unit when its name appears in the list of devices displayed on the screen of the Bluetooth device.

- This unit can be paired with a maximum of 8 Bluetooth devices. When a 9th Bluetooth device is paired, it will be registered in place of the oldest registered device.
- You can also enter pairing mode by pressing the OPTION button when the Bluetooth playback screen is displayed and selecting “Pairing Mode” from the displayed option menu.

NOTE

- To operate the Bluetooth device with the remote control of this unit, the Bluetooth device needs to support the AVRCP profile.
- The remote control of this unit is not guaranteed to work with all Bluetooth devices.
- For some Bluetooth devices, the volume set on the Bluetooth device is linked with that of the audio signal output from the analog audio output terminals (VARIABLE) of this unit.

Reconnecting to this unit from a Bluetooth device

After pairing is completed, the Bluetooth device can be connected without performing any operations on this unit.

This operation also needs to be performed when switching the Bluetooth device for playback.

1 **If a Bluetooth device is currently connected, deactivate the Bluetooth setting of that device to disconnect it.**

2 **Activate the Bluetooth setting of the Bluetooth device to be connected.**

3 **Select this unit from the Bluetooth device list on your Bluetooth device.**

4 **Play music using any app on your Bluetooth device.**

- When the power of this unit and the Bluetooth function of this unit are turned on, the input source will be automatically switched to “Bluetooth” if a Bluetooth device is connected.
- When the “Network Control” setting of this unit is set to “On” and a Bluetooth device is connected and is played with the unit in the standby state, the power of the unit will be turned on automatically. (☞ p. 80)

Getting the HEOS App

You can use many online music streaming services from the HEOS App. Depending upon your geographical location, there are several options to choose from.

Download the HEOS App for iOS or Android by searching App Store, Google Play store or Amazon Appstore for “HEOS”.

Download on the App Store | GET IT ON Google Play | amazon appstore

- Specifications of the HEOS App may be changed without prior notice for improvement purposes.

HEOS Account

HEOS Accounts can be registered in “HEOS Account” (☞ p. 86) in the menu of this unit or by tapping “Music” tab - “Settings” icon ⚙ in the HEOS App.

■ What is a HEOS Account?

A HEOS Account is master account or “keychain” for managing all of your HEOS music services with one single username and password.

■ Why do I need a HEOS Account?

With the HEOS Account you just have to enter your music services login names and passwords one time. This allows you to easily and quickly use multiple controller apps on different devices.

You just log into your HEOS Account on any device and you will have access to all of your associated music services, play history and custom playlists, even if you are at a friend’s house listening to music on their HEOS system.

■ Signing up for a HEOS Account

You will be instructed to signup for a HEOS Account the first time you try to access any music service from the main “Music” menu of the HEOS App. Follow the instructions in the HEOS App to complete the operation.

■ Changing your HEOS Account

1 **Tap the “Music” tab.**

2 **Select the Settings icon ⚙ in the upper left corner of the screen.**

3 **Select “HEOS Account”.**

4 **Change your location, change your password, delete your account or sign out of your account.**

Playing from streaming music services

A music service is an online music company that provides access to vast music collections via free and/or paid subscriptions. Depending upon your geographical location, there are several options to choose from.

■ Selecting a room/device

1 Tap the “Rooms” tab. Select “Marantz NA6006” if there are multiple HEOS devices.

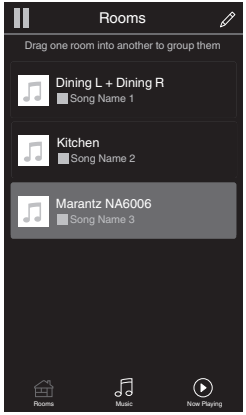

- Tap the Pencil icon at the top right to switch edit mode. You can change the displayed name.

■ Selecting the music track or station from music sources

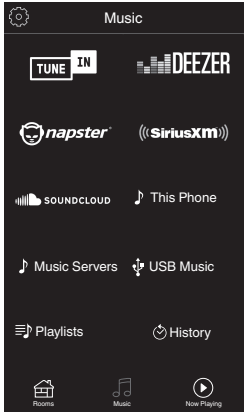

1 **Tap the "Music" tab and select a music source.**

- All music services displayed may not be available in your location.

2 Browse the music to play.

After selecting a music track or radio station the app will automatically change to the “Now Playing” screen.

- When you select a music track to play you will be asked how you want to queue up your music.

Play Now:	Inserts the item into the queue after the currently playing track and plays the selected item immediately.
Play Now & Replace Queue:	Clears the queue and plays the selected item immediately.
Play Next:	Inserts the item into the queue after the current song and plays it when the current song ends.
Add to End of Queue:	Adds the item to the end of the queue.

- When you select a radio station the following items are displayed.

Play Now:	Plays the selected item immediately.
Add to HEOS Favorites:	Adds to HEOS Favorites.

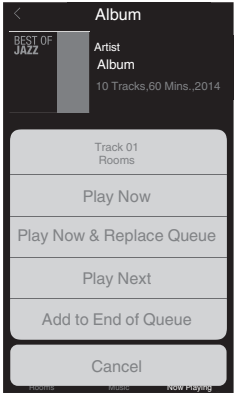

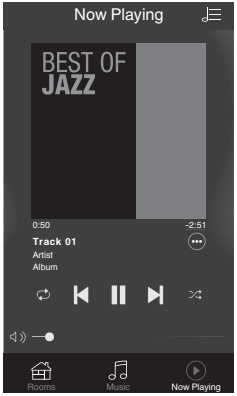

Listening to the same music in multiple rooms

The HEOS system is a true multi-room audio system that automatically synchronizes audio playback between multiple HEOS devices so that the audio coming from different rooms is perfectly in sync and always sounds amazing! You can easily add up to 32 HEOS devices to your HEOS system. You can join or group up to 16 individual HEOS devices into a group of HEOS devices that function as if they were a single HEOS device.

■ Grouping rooms

1 **Press and hold your finger on room that is not playing music.**

2 **Drag it into the room that is playing music and lift your finger.**

3 **The two rooms will be grouped together into a single device group and both rooms will be playing the same music in perfect sync.**

■ Ungrouping rooms

1 **Press and hold your finger on room that you want to remove from the group.**

2 **Drag it out of the group and lift your finger.**

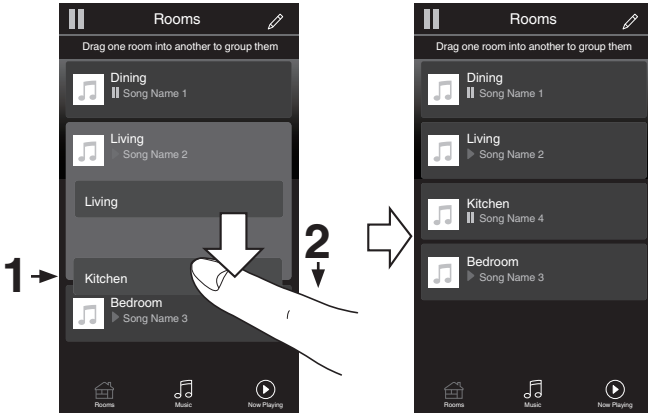

NOTE

- You can not remove the first room that started playing the music before grouping.

■ Grouping all rooms (party mode)

You can easily group 16 rooms together into Party Mode by using a “pinch” gesture.

1 **Place two fingers on the screen over the list of rooms.**

2 **Quickly pinch your two fingers together and release.**

3 **All of your rooms will be joined together and begin playing the same music in perfect sync.**

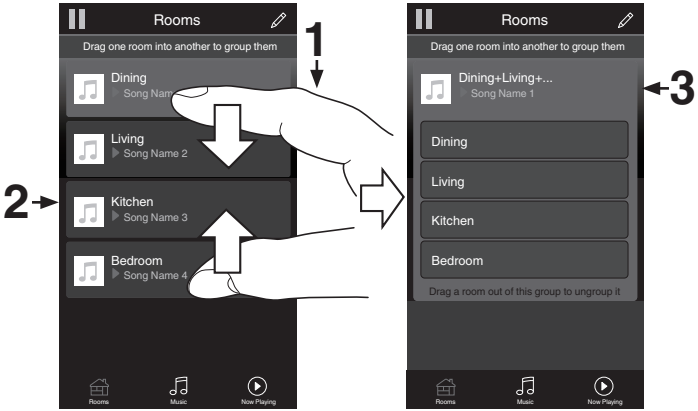

■ Ungrouping all rooms

You can easily ungroup all of your rooms and exit Party Mode by using a “spread” gesture.

1 **Place two fingers close together on the screen over list of rooms.**

2 **Quickly spread your two fingers apart from each other and release.**

3 **All of your rooms will be ungrouped.**

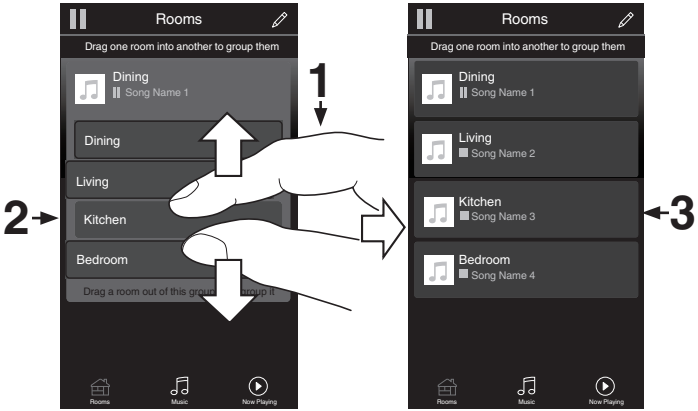

Using as a D/A converter

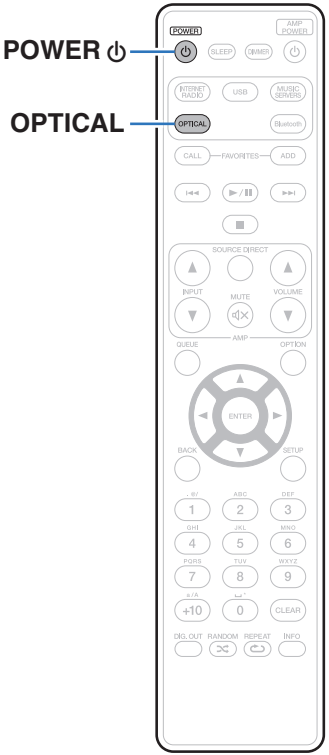

Digital audio signals input from an external device into this unit can be converted and output as analog signals using this unit's D/A converter. (D/A converter function)

Connect and playback from a digital device (Optical)

1 **Press OPTICAL to switch the input source to “Optical”.**

- If the sampling frequency cannot be detected, “Signal Unlock” will be displayed.
- “Unsupported” is displayed when audio signals that are not supported by this unit are input.

■ Specifications of supported audio formats

See “D/A converter” (☞ p. 108).

NOTE

- Do not input non-PCM signals, such as Dolby Digital and DTS. This causes noise and could damage the speakers.

AirPlay function

Music files stored on your iPhone, iPod touch, iPad or iTunes can be played on this unit via the network.

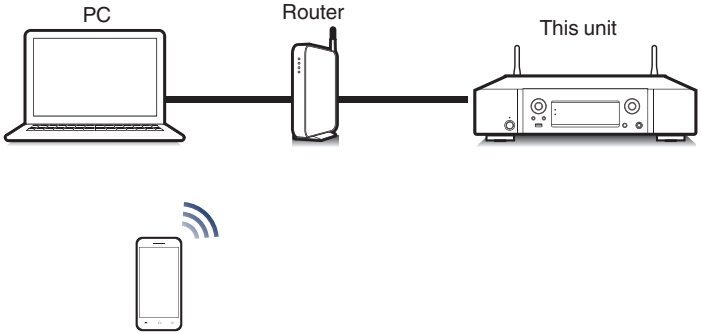

- Source input will be switched to “AirPlay” when AirPlay playback is started.
- You can stop AirPlay playback by choosing other input source.
- For information about how to use iTunes, also see the Help for iTunes.
- The screen may differ depending on the OS and software versions.

NOTE

- When AirPlay is used while a power amplifier is connected to this unit, the volume set on the iPhone, iPod touch, iPad or in iTunes is output. Turn down the iPhone, iPod touch, iPad or iTunes volume prior to playback and then adjust it to a suitable level.

This device supports AirPlay 2.

Sync multiple AirPlay 2 compatible devices/speakers for simultaneous playback.

- This unit supports AirPlay 2 and requires iOS 11.4 or later.

Playing songs from your iPhone, iPod touch or iPad

If you update your “iPhone/iPod touch/iPad” to iOS 4.2.1 or later, you can stream music stored in your “iPhone/iPod touch/iPad” directly to this unit.

1 Connect your iPhone, iPod touch or iPad Wi-Fi to the same network as this unit.

- For details, see your device’s manual.

2 Play the song on your iPhone, iPod touch or iPad.

AirPlay icon is displayed on the iPhone, iPod touch or iPad screen.

3 Tap the AirPlay icon.

[Example] iOS 11

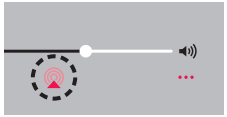

[Example] iOS 9

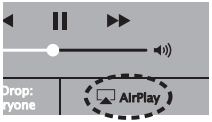

4 Select the speaker (devices) you want to use.

Playing iTunes music with this unit

1 Install iTunes 10, or later, on a Mac or Windows PC that is connected to the same network as this unit.

2 Start iTunes and click the AirPlay icon to select this unit.

[Example] iTunes

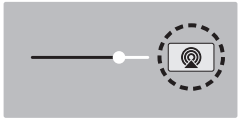

3 Choose a song and click play in iTunes.

The music will stream to this unit.

- When “Network Control” is set to “On”, you can turn on this unit by operating iTunes. (☞ p. 80)

Perform iTunes playback operations with the remote control unit of this unit

With this unit's remote control unit, you can perform iTunes song play, pause, and auto search (cue) operations.

1 **Select the "Edit" - "Preferences..." in the iTunes menu.**

2 **Select "Devices" in the iTunes setting window.**

3 **Check "Allow iTunes audio control from remote speakers", and then click "OK".**

- This does not need to be set if using version 12 or later of iTunes.

Play a song from your iPhone, iPod touch or iPad on multiple synced devices (AirPlay 2)

Songs from an iPhone, iPod touch or iPad operating iOS 11.4 or later can be synced with multiple AirPlay 2 supported devices for simultaneous playback.

1 **Play the song on your iPhone, iPod touch or iPad.**

AirPlay icon is displayed on the iPhone, iPod touch or iPad screen.

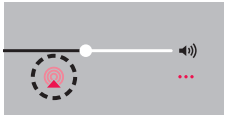

2 **Tap the AirPlay icon.**

Displays a list of devices/speakers that can be played back on the same network.

- A circle is displayed to the right of AirPlay 2 compatible devices.

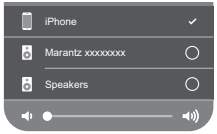

3 **Tap the devices/speakers you want to use.**

- Multiple AirPlay 2 compatible devices can be selected.
- Volume can be adjusted for each device individually or for all synced devices simultaneously.

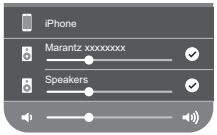

Spotify Connect function

Spotify is the world's most popular streaming service. If you subscribe to Spotify Premium, you can control your new speaker with your phone or tablet. Because Spotify is built-in to your speaker, you can still take calls or use other apps - the music never stops.

For information on how to set up and use Spotify Connect please visit www.spotify.com/connect

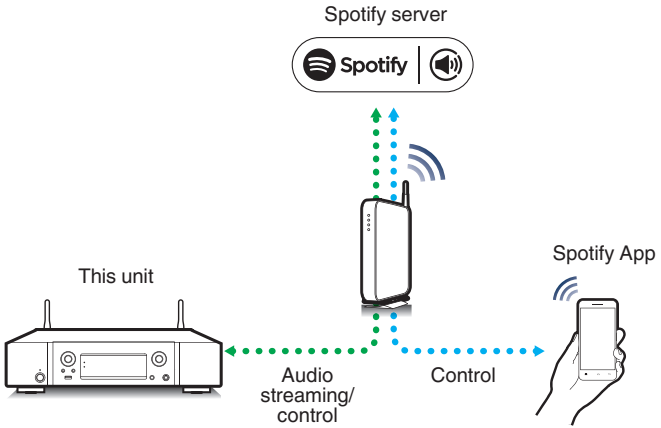

Playing Spotify music with this unit

Download the "Spotify App" onto your iOS or Android device beforehand. To play a Spotify track in this unit, you need to register in the Spotify premium account first.

1 **Connect the Wi-Fi settings of the iOS or Android device in the same network as this unit.**

2 **Launch the Spotify App.**

3 **Play back the Spotify track.**

4 **Tap ▣ on the playback screen and select this unit.**

The music will stream to this unit.

Convenience functions

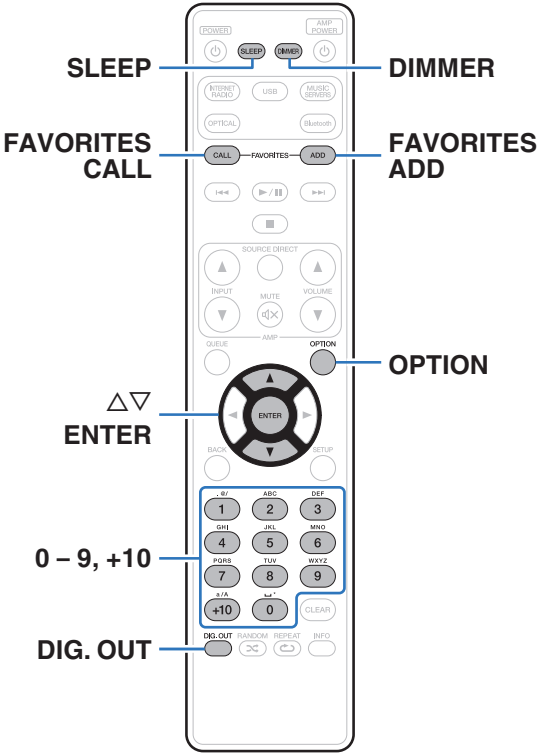

- This section explains how to use convenient functions that can be used for each input source.
- Control of “HEOS Favorites” operations is optimized for the app. For more information on acquiring the app, see “Getting the HEOS App” (☞ p. 44).

Adding to HEOS Favorites

This function only works for streamed content.

1 **While content is playing, press FAVORITES ADD.**

The HEOS favorites list is displayed.

2 **Use △▽ to select the “HEOS Favorites” number you would like to save your contents to, then press ENTER.**

- Press OPTION on the remote control while content is playing back to display the option menu. Content can also be added to “HEOS Favorites” from the option menu.

Playing back HEOS Favorites

1 Press FAVORITES CALL.

The “HEOS Favorites” is displayed.

2 Use △▽ to select the content you would like to playback, then press ENTER.

- You can select content you would like to playback from your HEOS Favorites by pressing 0-9 and +10.

Deleting a HEOS Favorites

1 While the HEOS Favorites content list is displayed, use △▽ to select the item you want to remove from HEOS Favorites, then press ENTER.

2 Use △▽ to select “Remove from HEOS Favorites”, then press ENTER.

Switching the display’s brightness

The display brightness can be adjusted between four levels. Switching the display off reduces a source of noise that affects sound quality, enabling higher sound quality playback.

1 Press DIMMER.

- The brightness of the display switches each time the button is pressed.

- When the display is turned off, the “DISPLAY OFF” indicator lights up on the display.
- When “Off” is set, the display turns off temporarily when operating the buttons.
- The display brightness is set to most brightly by default.

Using the sleep timer

You can have the power automatically switched to standby once a set time has elapsed. This is convenient for listening while going to sleep.

1 Press SLEEP during playback and select the setting time.

- The sleep timer can be set to up to 90 minutes, in steps of 10 minutes.
- After about 5 seconds, the setting is entered and the display returns to as it was before.

■ To cancel the sleep timer

1 Press SLEEP to set “Sleep ► Off”.

- The sleep timer setting is canceled when the unit switches to standby mode.
- To check the time remaining until the sleep timer is activated, press SLEEP.

Stopping digital outputs

Stopping digital audio output reduces a source of noise that affects sound quality, enabling higher sound quality playback.

1 Press DIG. OUT.

The digital audio output is switched on and off each time the button is pressed.

- When digital output is turned off, the “DIG. OUT OFF” indicator lights up on the display.

Menu map

For menu operations, see the following page.
By default, this unit has recommended settings defined. You can customize this unit based on your existing system and your preferences.

Setting items	Detailed items	Description	Page
Audio	**Filter**	This unit is equipped with a sound quality adjusting function which allows users to enjoy the desired playback sound quality.	71
	Lock Range	Narrowing down the “Lock Range” setting reduces jittering, providing clearer sound.	71
	Variable Out	You can stop the circuit that outputs audio from the analog audio output terminals (VARIABLE) of this unit. This prevents the audio signal output from the analog audio output terminals (FIXED) from being affected.	72
	Volume Limit	Make a setting for the maximum volume of the audio signal output from the analog audio output terminals (VARIABLE).	72
	Phones	The headphones circuit operation can be stopped to minimize noise from the headphones circuit which could interfere with the analog audio output signal.	72
	H/P Amplifier Gain	Set the gain of the headphone amplifier. By setting according to the impedance of your headphone, you can enjoy playing headphones at an appropriate volume.	73

Setting items	Detailed items	Description/Detailed items	Page
General	**Language**	Sets the language for display the menu.	74
	Auto-Standby	Sets the unit power to standby when the unit is not in use.	74
	Usage Data	Selects whether or not to send anonymous usage data to Marantz.	75
	Firmware	Set whether or not to check for firmware update, update the firmware, and display update and upgrade notifications.	75
		Check for Update	75
		Auto-Update	76
		Allow Update	76
		Upgrade Notification	76
		Add New Feature	77
	Information	Displays notifications. Also, sets whether or not to display the notification when the power is turned on.	78
		Notification Alerts	78
		Check for Notifications	78
	Reset	Various settings are reset to the factory default values.	78

Setting items	Detailed items		Description/Detailed items	Page
Network	**Network Information**		Displays various information about the network.	79
	Wi-Fi		The Wi-Fi function can be stopped to prevent noise that affects the sound quality.	79
	Bluetooth		Stopping Bluetooth function reduces a source of noise that affects sound quality, enabling higher sound quality playback.	79
	Network Control		Performs the on/off settings for the network function when in standby mode.	80
	Friendly Name		Edits a name displayed on the Internet.	80
	Connection		Choose whether to connect the home network to a wireless LAN or a wired LAN.	81
		Wi-Fi	Use the wireless LAN (Wi-Fi) function to connect to a network.	81
			Auto-Scan	81
			Share Wi-Fi setting from an iOS device	82
			WPS Router	82
			Manual	83
		Wired	Use a LAN cable to connect to a network.	81

Setting items	Detailed items	Description/Detailed items	Page
Network	**Settings**	Used for manually setting the IP address.	84
		DHCP	84
		IP Address*1	84
		Subnet Mask*1	84
		Gateway*1	84
		DNS*1	84
		Save	84
	Diagnostics	Used to check the network connection.	85
		Physical Connection*2	85
		Router Access	85
		Internet Access	85

*1 Displayed when the “DHCP” setting is “Off”.

*2 When connected using a wireless LAN, “Connection Wireless (Wi-Fi)” will be displayed.

Setting items	Detailed items	Description	Page
HEOS Account	**【When the user is signed out the HEOS Account】**		
	I have a HEOS Account	Selects to sign in.	86
	Create Account	Creates new HEOS Account.	86
	Forgot Password	If you have forgotten the password, an email explaining how to reset the password will be sent.	86
	【When the user is signed in the HEOS Account】		
	Signed in As	Displays your HEOS Account.	86
	Change Location	Selects your location.	86
	Change Password	Changes your HEOS Account Password.	86
	Delete Account	Deletes your HEOS Account.	86
	Sign Out	Sign out of your HEOS Account.	86
Quick Setup	–	Performs the network settings using a Wizard style window. For details on the operations, see the separate “Quick Start Guide”.	–

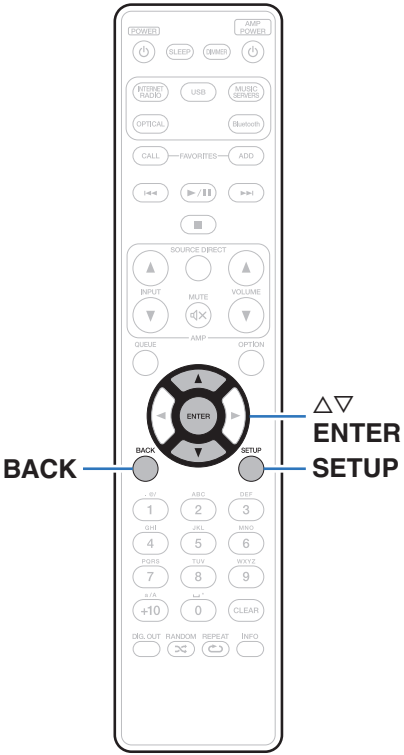

Menu operation

1 Press SETUP.

The menu is displayed on the display.

2 Use △▽ to select the menu to be set or operated, then press ENTER.

3 Use △▽ to change to desired setting.

4 Press ENTER to enter the setting.

- To return to the previous item, press BACK.
- Exiting the Menu, press SETUP while the menu is displayed. The display returns to the normal display.

Inputting characters

On this unit, you can change the name displayed on the following screens to the names that you prefer.

- Friendly Name (☞ p. 80)
- Character input for the network functions

Using the number buttons

1 Display the screen for inputting characters.

- To change a character, use ◁ ▷ to align the cursor with the character that you want to change.

2 Press +10 to select the character type (upper case, lower case, characters with diacritical marks or numeric characters).

3 Use 0 – 9, +10 until the desired character is displayed.

- The types of characters that can be input are as shown below.

1 .●/	1 . @ - _ / :
2 ABC	a b c A B C 2 ä à á â ã å æ ć ç č Ä À Á Â Ã Å Æ Ć Ç Č
3 DEF	d e f D E F 3 ð ë è é ê Ð Ë È É Ê
4 GHI	g h i G H I 4 ï ì í î Ï Ì Í Î
5 JKL	j k l J K L 5
6 MNO	m n o M N O 6 ñ ö ò ó ô õ ø Ñ Ö Ò Ó Ô Õ Ø
7 PQRS	p q r s P Q R S 7 ß ŕ ř ś ş š ß Ŕ Ř Ś Ş Š
8 TUV	t u v T U V 8 ü ù ú û Ü Ù Ú Û
9 WXYZ	w x y z W X Y Z 9 ý ź ž þ Ý Ź Ž Þ
0 ␣	0 (Space) ! " # $ % & ' ( ) * + , ; < = > ? [\ ] ^ ` { | } ¡ ¢ £ ¤ § © « ¯ ° ± » ¿

4 Repeat steps 2 and 3 to input characters then press ENTER to register it.

Using the cursor buttons

1 **Display the screen for inputting characters.**

- To change a character, use ◁ ▷ to align the cursor with the character that you want to change.

2 **Use △▽ to change the character.**

- The types of characters that can be input are as shown below.

【Lower case characters】
abcdefghijklmnopqrstuvwxyz
【Upper case characters】
ABCDEFGHIJKLMNOPQRSTUVWXYZ
【Symbols】
! " # $ % & ' ( ) * + , - . / : ; < = > ? @
[\ ] ^ _ ` { | } ~ ¡ ¢ £ ¤ § © « ¯ ° ± » ¿
【Lowercase letters (with diacritical marks)】
äàáâãåæćçčðëèéêĩìíîñöòóôõøßřŕśşšüùúûýźžþ
【Uppercase letters (with diacritical marks)】
ÄÀÁÂÃÅÆĆÇČÐËÈÉÊĨÌÍÎÑÖÒÓÔÕØŘŔŚŞŠÜÙÚÛÝŹŽÞ
【Numbers】
0123456789 (Space)

3 **Repeat step 2 to input characters then press ENTER to register it.**

- Press CLEAR to erase the character that is currently selected.
- Press and hold CLEAR for 3 seconds or more to erase all characters.
- Press ►►I to insert a space.

Audio

Make audio-related settings.

Filter

This unit is equipped with a sound quality adjusting function which allows users to enjoy the desired playback sound quality. The unit supports PCM signal.

Filter 1 (Default)**:**	Offers a short impulse response for both pre-echo and post-echo. Large amount of audio information clearly reproduces deep stereo imaging and the relative position of the sound source.
Filter 2:	This characteristic is known as asymmetrical impulse response. The post echo is slightly longer than the pre-echo. The sound characteristics is more analog like.

Lock Range

Narrowing down the “Lock Range” setting reduces jittering, providing clearer sound. However, if the “Lock Range” is set too narrow, it may cause intermittent sounds and noise during playback or when switching to a song with a different sampling frequency. If this occurs, broaden the “Lock Range” setting until the music you are listening to sounds normal.

Narrow / Medium / Wide (Default : Wide)

- A separate “Lock Range” setting is recorded for each input source, except for Network playback, USB memory and Bluetooth, which have a common setting.

Variable Out

You can stop the circuit that outputs audio from the analog audio output terminals (VARIABLE) of this unit. This prevents the audio signal output from the analog audio output terminals (FIXED) from being affected. If you will not use the analog audio output terminals (VARIABLE), turning this setting off enables a higher quality of sound.

On (Default):	Enables variable audio output.
Off:	Disables variable audio output.

Volume Limit

Make a setting for the maximum volume of the audio signal output from the analog audio output terminals (VARIABLE).

Off (Default):	Do not set a maximum volume. (100 (+6dB))
95 (+1dB) / 90 (-4dB) / 85 (-9dB) / 80 (-14dB)	

Phones

The headphones circuit operation can be stopped to minimize noise from the headphones circuit which could interfere with the analog audio output signal.

On (Default):	Enable the headphones output.
Off:	Disable the headphones output.

- When not using headphones, you can enjoy higher quality sound with Off mode.

H/P Amplifier Gain

Set the gain of the headphone amplifier. Set this according to the impedance of the connected headphones. It is recommended that this is set on the “Low” side if the headphones have low impedance and on the “High” side if they have high impedance.

High:	Set the gain of the headphone amplifier to “High”. Set when there is insufficient volume, even when the gain setting is “Mid”.
Mid (Default)**:**	Set the gain of the headphone amplifier to “Mid”.
Low:	Set the gain of the headphone amplifier to “Low”. Set this if the volume is too high at the factory default setting.

NOTE

- The headphone volume varies depending on the H/P Amplifier Gain setting. Decrease the volume or mute the audio first if changing this setting while listening to audio.

General

Language

Sets the language for display the menu.

English / Deutsch / Français / Italiano / Nederlands / Español / Svenska / Русский / Polski (Default : English)

Auto-Standby

Sets the amount of time that must elapse without unit operation or an input signal before the unit goes into standby automatically.

Off:	The unit does not go into standby automatically.
1min:	The unit goes into standby after 1 minutes.
5min:	The unit goes into standby after 5 minutes.
15min (Default)**:**	The unit goes into standby after 15 minutes.
Other:	Sets the minutes (between 1 and 99) before the unit automatically goes into standby. After setting the amount of time with 0 – 9, +10 buttons, press ENTER to confirm the setting.

Usage Data

For product improvement purposes, please send information on the device settings and operating conditions of the functions to Marantz. Information provided by customers will be used as reference material for product development purposes in the future.
Marantz will never provide any information we collect to third parties.

Yes:	Provide information on the operating status of this unit.
No:	Do not provide information on the operating status of this unit.

Firmware

Checks for and installs the latest firmware information updates and upgrades. Also sets the upgrade notification message display.

■ Check for Update

Check for firmware updates.
The firmware can be updated if a firmware update has been released.

Now:	Execute the update process. During the update, the progress is shown on the display.
Later:	Update later.

- This unit automatically retries updating if updating fails. If an update still cannot be performed, an “Update Error” message appears in the display. See “Troubleshooting” – “Update/upgrade error messages” for information on update error messages. (☞ p. 105)
  Check the conditions according to the message and try the update again.
- This menu cannot be selected when “Allow Update” is set to “Off”.

■ Auto-Update

This unit will automatically update to the newest firmware when in standby mode.

❑ Auto-Update

This unit will automatically update to the newest firmware when in standby mode.

On:	Turns on Automatic Updates.
Off (Default)**:**	Turns off Automatic Updates.

❑ Time Zone

Change the time zone.
Set the time zone that matches the area where you live.

- This menu cannot be selected when “Allow Update” is set to “Off”.

■ Allow Update

Enable or disable updates and upgrades for this unit.

On (Default)**:**	Enables this unit to receive updates and upgrades.
Off:	Prevents this unit from receiving update and upgrade.

- This unit and HEOS App may become incompatible when this setting is set to “Off”.

■ Upgrade Notification

When the latest Upgrade firmware is available, a notification message is displayed on the display of this unit at power on.
The notification message is displayed for about 40 seconds when the power is turned on.

On (Default)**:**	Display upgrade message.
Off:	Do not display upgrade message.

- This menu cannot be selected when “Allow Update” is set to “Off”.

■ Add New Feature

Display new features that can be downloaded to this unit and perform an upgrade.

Upgrade Package:	Display the items to be upgraded.
Upgrade ID:	The ID number shown on the display is needed when carrying out the procedure.
Upgrade Status:	Display a list of the additional functions provided by the upgrade.
Start Upgrade:	Execute the upgrade process. During the upgrade, the amount of upgrade time which has elapsed is displayed.

- Information regarding the “Update” function and “Add New Feature” will be announced on the Marantz website each time related plans are defined. See the Marantz website for details about upgrades.
- When the procedure is complete, “Registered” is displayed in this menu and upgrades can be carried out. If the procedure has not been carried out, “Not Registered” is displayed.
- If the upgrade is not successful, “Upgrade Error” message appears in the display. See “Troubleshooting” – “Update/upgrade error messages” for information on upgrade error messages. (☞ p. 105)
  Check the settings and network environment and then perform the upgrade again.
- This menu cannot be selected when “Allow Update” is set to “Off”.

Notes concerning use of “Update” and “Add New Feature”

- In order to use these functions, you must have the correct system requirements and settings for an Internet connection. (☞ p. 25)
- Do not turn off the power until updating or upgrading is completed.
- Even with a broadband connection to the Internet, approximately 20 minutes is required for the updating/upgrading procedure to be completed.
- Once updating/upgrade starts, normal operations on this unit cannot be performed until updating/upgrading is completed. Furthermore, there may be cases where backup data is reset for the parameters, etc., set on this unit.
- If the update or upgrade fails, press and hold the ⏻ on the main unit for more than 5 seconds, or remove and re-insert the power cord. After about 1 minute, “Please wait” appears on the display and update restarts. If the error continues, check the network environment.

Information

Notification Alerts

Sets whether or not to display the notification when the power is turned on.

On (Default)**:**	Notification messages are displayed.
Off:	Notification messages are not displayed.

Check for Notifications

Displays notifications.

Reset

Perform this procedure if the display is abnormal or if operations cannot be performed. Restores the contents of each setting to the factory settings. Make settings again.

Reset factory defaults:	Unit is initialized.
Cancel:	Unit is not initialized.

Network

To use this unit by connecting it to a home network (LAN), you must configure network settings.
If you set up your home network (LAN) via DHCP, set “DHCP” to “On”. (Use the default setting.) This allows this unit to use your home network (LAN).
When assigning an IP address to each device manually, you need to assign an IP address to this unit using the “IP Address” settings, and enter information about your home network (LAN) such as the gateway address and subnet mask, etc.

Network Information

Displays network information.

Friendly Name / Connection / SSID (Wi-Fi Signal Strength) / DHCP / IP Address / MAC Address (Ethernet) / MAC Address (Wi-Fi)

Wi-Fi

The Wi-Fi function can be stopped to prevent noise that affects the sound quality. Using a wired LAN to connect this unit to the network enables playback with a high sound quality.

Enabled (Default)**:**	Enables the Wi-Fi function.
Disabled:	Disables the Wi-Fi function.

Bluetooth

Stopping Bluetooth function reduces a source of noise that affects sound quality, enabling higher sound quality playback.

Enabled (Default)**:**	Enables the Bluetooth function.
Disabled:	Disables the Bluetooth function.

Network Control

Enables network communication in standby power mode.

On:	Network is on during standby. Main unit operable with a network compatible controller.
Off (Default):	Suspend network function during standby.

- When using the HEOS App, use with the “Network Control” setting set to “On”.

NOTE

- When “Network Control” is set to “On”, the unit consumes more standby power.

Friendly Name

The Friendly Name is the name of this unit displayed on the network. You can change the Friendly Name according to your preferences.

■ Friendly Name

Selects Friendly Name from the list.
When you select “Other”, you can change the Friendly Name according to your preferences.

Current Friendly Name / Home Theater / Living Room / Family Room / Guest Room / Kitchen / Dining Room / Master Bedroom / Bedroom / Den / Office / Marantz NA6006 / Other

- Up to 30 characters can be input.
- For character input, see “Inputting characters” (☞ p. 69).
- The default Friendly Name on first use is “Marantz NA6006”.

Connection

Choose whether to connect the home network to a wireless LAN or a wired LAN.
When connecting to the network using wired LAN, select “Wired” after connecting a LAN cable.
When connecting to the network using wireless LAN, select “Wi-Fi” and configure the “Wi-Fi Setup”. (☞ p. 81)

Wi-Fi:	Use the wireless LAN (Wi-Fi) function to connect to a network.
Wired:	Use a LAN cable to connect to a network.

■ Wi-Fi Setup

Connect to a wireless LAN (Wi-Fi) router.
The router can be connected in the following ways. Select the connection method to suit your home environment.

- “Wi-Fi Setup” is not displayed in the setting menu when “Connection” in the setting menu is set to “Wired”.

❑ Auto-Scan

Select the network you wish to connect to from the list of possible networks shown on the display.

1. Select the network you wish to connect to from the list of wireless networks.
   Select “Rescan” if the network cannot be found.
2. Enter your password and press ENTER.

❑ Share Wi-Fi setting from an iOS device

Use your iOS device (iPhone/iPod/iPad) to connect to the network. By connecting your iOS device to this unit using Wi-Fi, the unit can be automatically connected to the same network as your device.

1. Select “Share Wi-Fi setting from an iOS device” on the display.
2. Check that your iOS device is connected to the wireless LAN (Wi-Fi) router and select “Marantz NA6006” from “SET UP NEW AIRPLAY SPEAKER...” at the bottom of the Wi-Fi configuration screen of your iOS device.
3. Tap “Next” on the screen of the iOS device.

- The iOS device firmware version needs to support iOS 7 or later.

❑ WPS Router

Use a WPS-compatible router to connect using the push button method.

1. Select “WPS Router” on the display.
2. Switch to the WPS mode by pressing the WPS button of the router you wish to connect to.
   - The time for pressing the button varies depending on the router.
3. Press ENTER within 2 minutes.

❑ Manual

Enter the name (SSID) and password of the network you wish to connect to.

1. Set the following items.

SSID:	Input the name of the wireless network (SSID).
Security:	Select the encryption method according to the encryption setting of the access point you are using.
Password:	Input the password.

2. Select “Test Connection” at the end of the setting.

- The wireless LAN (Wi-Fi) settings of this unit can also be configured from a PC or tablet that supports wireless LAN connection.
  1. Press and hold the INPUT and BACK buttons on the main unit for at least 3 seconds when the power of the unit is on.
  2. Connect the wireless LAN of the PC or tablet used to “Marantz NA6006” when the message “Connect your Wi-Fi device to Wi-Fi network called “Marantz NA6006”” appears in the display.
  3. Start up the browser and enter “192.168.1.16/Settings/” in the URL.
  4. Use the browser to enter the settings, select “Save Settings” and then exit the settings.
- Set “1” as the default key setting of the router when connecting to a WEP encrypted network. (The default key of this unit is fixed as “1”.)

Settings

Configure the IP address.

- If you are using a broadband router (DHCP function), the information required for network connection such as the IP address will be automatically configured since the DHCP function is set to “On” in the default settings of this unit.
- Set up the IP Address, Subnet Mask, Gateway and DNS server information only when assigning a fixed IP address or when connecting to a network without DHCP function.

DHCP

Selects how to connect to the network.

On (Default)**:**	Configure the network settings automatically from your router.
Off:	Configure the network settings manually.

IP Address

Set the IP address within the ranges shown below.

- The Network Audio function cannot be used if other IP addresses are set.

  CLASS A: 10.0.0.1 - 10.255.255.254

  CLASS B: 172.16.0.1 - 172.31.255.254

  CLASS C: 192.168.0.1 - 192.168.255.254

Subnet Mask

When connecting an xDSL modem or connector adapter directly to this unit, input the subnet mask indicated in the documentation supplied by your provider. Normally input 255.255.255.0.

Gateway

When connected to a gateway (router), input its IP address.

DNS

Enter the DNS address indicated in the documentation supplied by your provider.

Save

Save settings

- If you cannot connect to the Internet, recheck the connections and settings. (☞ p. 25)
- If you do not understand about Internet connection, contact your ISP (Internet Service Provider) or the store from which you purchased your computer.

Diagnostics

Used to check the network connection.

■ Physical Connection

Checks the physical LAN port connection.

OK	
Error:	The LAN cable is not connected. Check the connection.

- When connected using a wireless LAN, “Connection Wireless (Wi-Fi)” will be displayed.

■ Router Access

Checks the connection from this unit to the router.

OK	
Error:	Failed to communicate with the router. Check the router settings.

■ Internet Access

Checks whether this unit has access to the Internet (WAN).

OK	
Error:	Failed to connect to the Internet. Check the Internet connection environment or router settings.

HEOS Account

Make HEOS Account-related settings.
HEOS Account is needed in order to use HEOS Favorites.
The menu displayed differs depending on the status of the HEOS Account.

You have not signed in

■ I have a HEOS Account

If you already have a HEOS Account, enter the current account name and password to sign in.

■ Create Account

If you do not have a HEOS Account, create a new HEOS Account.

■ Forgot Password

If you have forgotten the password, an email explaining how to reset the password will be sent.

You have already signed in

■ Signed in As

The currently signed in HEOS Account is displayed.

■ Change Location

Change the regional settings for the signed in HEOS Account.

■ Change Password

Change the password for the signed in HEOS Account.

■ Delete Account

Delete the signed in HEOS Account.

■ Sign Out

Sign out from the HEOS Account.

Switching the function of the volume buttons on the remote control

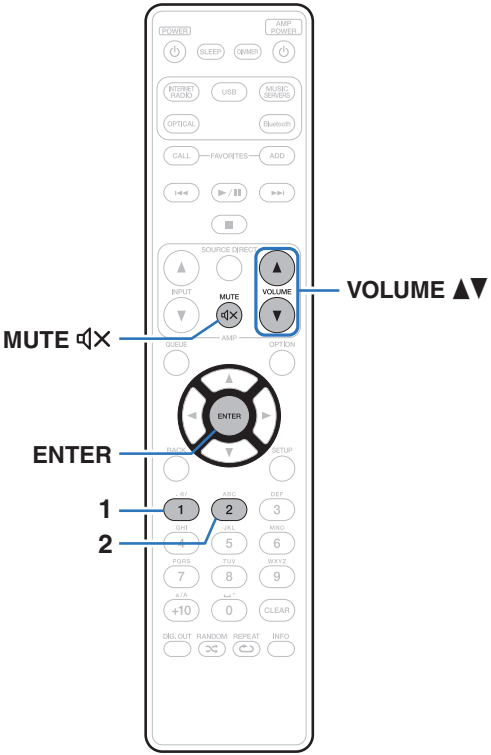

The operation mode of the included remote control can be switched to enable audio adjustment on the main unit if the main unit analog audio output (VARIABLE) is connected to the power amp.
There are two remote control operation modes, “Amplifier Operation Mode” and “Network Audio Player Operation Mode”.
Adjust the Marantz amplifier volume from Amplifier Operation Mode.
Adjust the volume of the audio signal output from the analog audio output (VARIABLE) of the main unit from Network Audio Player Operation Mode.
The default setting is Amplifier Operation Mode.

- Be sure to check the operation of each unit after setting the remote control operation modes.
- Switch between the remote control operation mode settings by pressing the VOLUME ▲▼ and MUTE 🔇 buttons.

Setting the remote control operation mode to network audio player operation mode

1 **Press and hold the ENTER and number 1 button on the remote control unit down together for more than 5 seconds.**

- "Variable Out" in the menu must also be set to "On" to adjust the volume of the audio signal output from the analog audio output connectors (VARIABLE). (☞ p. 72)

Setting the remote control operation mode to amplifier operation mode

1 **Press and hold the ENTER and number 2 button on the remote control unit down together for more than 5 seconds.**

- The remote control operation modes returns to the default settings when the batteries are removed. Set the remote control operation modes again after replacing the batteries.

Contents

■ Tips

I want to switch the filter to change the desired sound quality	90
I want to enjoy analog output audio at higher quality	90
I want to listen to high sound performance playback	90
Simple operations in the power off state	91
I want to connect a power amplifier to this unit	91
I want the volume not to become too loud by mistake	91

■ Troubleshooting

Power does not turn on/Power is turned off	93
Operations cannot be performed through the remote control unit	94
Display on this unit shows nothing	94
No sound comes out	95
Sound is interrupted or noise occurs	96
Desired sound does not come out	97
AirPlay cannot be played back	97
USB memory devices cannot be played back	99
Bluetooth cannot be played back	100
The Internet radio cannot be played back	101
Music files on PC or NAS cannot be played back (Music server)	102
Various online services cannot be played	103
Cannot connect to a wireless LAN network	103
Audio from digital devices cannot be played back (Optical)	104
Update/upgrade error messages	105

Tips

I want to switch the filter to change the desired sound quality

- Switch the filter characteristics. (☞ p. 71)

I want to enjoy analog output audio at higher quality

- Press the DIG. OUT button on the remote control unit to turn digital audio output off. (☞ p. 62)
- Press the DIMMER button to turn the display off. (☞ p. 61)
- The headphones circuit operation can be stopped to minimize noise from the headphones circuit which could interfere with the analog audio output signal. Set “Off” to the “Phones”. (☞ p. 72)

I want to listen to high sound performance playback

- The Wi-Fi function can be stopped to prevent noise that affects the sound quality. Set “Disabled” to the “Wi-Fi”. (☞ p. 79)
- Stopping Bluetooth function reduces a source of noise that affects sound quality, enabling higher sound quality playback. Set “Disabled” to the “Bluetooth”. (☞ p. 79)
- You can stop the circuit that outputs audio from the analog audio output terminals (VARIABLE) of this unit. This prevents the audio signal output from the analog audio output terminals (FIXED) from being affected. Set “Off” to the “Variable Out”. (☞ p. 72)

Simple operations in the power off state

- Press the ►/❚❚ button to automatically turn the unit's power supply on and start playback of the last selected input source.
- When the "Network Control" function is set to "On", you can perform playback, or other operations through AirPlay or HEOS App. (☞ p. 80)

I want to connect a power amplifier to this unit

- A power amplifier can be connected to the analog audio output connectors (VARIABLE) on the rear panel. Set "Variable Out" to "On" in the menu and set the remote control operation mode of the volume buttons on the remote control to network audio player operation mode to adjust the volume of the audio signal output from the analog audio output connectors (VARIABLE) using the remote control.

I want the volume not to become too loud by mistake

- Set the volume upper limit for "Volume Limit" in the menu beforehand. This prevents children or others from increasing the volume too much by mistake. (☞ p. 72)

Troubleshooting

If a problem should arise, first check the following:

1. Are the connections correct?
2. Is the set being operated as described in the owner's manual?
3. Are the other devices operating properly?

- If steps 1 to 3 above do not improve the problem, restarting the device may improve the problem.
  Continue pressing the ⏻ button on the unit until "Restart" appears in the display, or remove and re-insert the power cord of the unit.

If this unit does not operate properly, check the corresponding symptoms in this section.
If the symptoms do not match any of those described here, consult your dealer as it could be due to a fault in this unit. In this case, disconnect the power immediately and contact the store where you purchased this unit.

Power does not turn on / Power is turned off

Power is not turned on.

- Check whether the power plug is correctly inserted into the power outlet. (☞ p. 28)
- This unit is in standby mode. Press the ⏻ button on the unit or the POWER ⏻ button on the remote control. (☞ p. 30)

Power automatically turns off.

- The sleep timer is set. Turn on the power again. (☞ p. 62)
- “Auto-Standby” is set. “Auto-Standby” is triggered when there is no operation for a set amount of time. To disable “Auto-Standby”, set “Auto-Standby” on the menu to “Off”. (☞ p. 74)

Operations cannot be performed through the remote control unit

Operations cannot be performed through the remote control unit.

- Batteries are worn out. Replace with new batteries. (☞ p. 8)
- Operate the remote control unit within a distance of about 7 m from this unit and at an angle of within 30°. (☞ p. 8)
- Remove any obstacle between this unit and the remote control unit.
- Insert the batteries in the proper direction, checking the ⊕ and ⊖ marks. (☞ p. 8)
- The unit's remote control sensor is exposed to strong light (direct sunlight, inverter type fluorescent bulb light, etc.). Move the set to a place in which the remote control sensor will not be exposed to strong light.
- When using a 3D video device, the remote control unit of this unit may not function due to effects of infrared communications between units (such as TV and glasses for 3D viewing). In this case, adjust the direction of units with the 3D communications function and their distance to ensure they do not affect operations from the remote control unit of this unit.
- When using this unit independently, set the switch to INTERNAL. (☞ p. 27)

Display on this unit shows nothing

Display is off.

- Press the DIMMER button, and change the setting to anything other than off. (☞ p. 61)

No sound comes out

No sound is produced. Or sound is distorted.

- Check the connections for all devices. (☞ p. 20)
- Insert connection cables all the way in.
- Check that input connectors and output connectors are not reversely connected.
- Check cables for damage.
- Check the amplifier's functions and controls and adjust as necessary.
- Make sure the DIG. OUT OFF indicator on the display is not lit when connecting a device with digital audio input. If it is lit, press the DIG. OUT button on the remote control to turn it off. (☞ p. 62)
- If using headphones, check that "Phones" is set to "On" in the menu. Sound is not output through the headphones jack if "Off" is set. (☞ p. 72)
- Set "Variable Out" to "On" in the menu when connecting a power amplifier to the analog audio output connectors (VARIABLE). (☞ p. 72)

Sound is interrupted or noise occurs

During playback from the Internet radio or USB memory device, sound is occasionally interrupted.

- When the transfer speed of the USB memory device is slow, sound may occasionally be interrupted.
- The network communication speed is slow or the radio station is busy.

When making a call on mobile phone, noise occurs in audio output on this unit.

- When making a call, keep a distance of 20 cm or longer between mobile phone and this unit.

Sound cuts out when using Wi-Fi connection.

- The frequency band used by the wireless LAN is also used by microwave ovens, cordless telephones, wireless game controllers and other wireless LAN devices. Using such devices at the same time as this unit may cause sound to cut out due to electronic interference. Sound cut out can be improved using the following methods. (☞ p. 25)
  - Install devices that cause interference away from this unit.
  - Turn off the power supply to devices that cause interference.
  - Change the settings of the router channel to which this unit is connected to. (See the instruction manual of the wireless router for details on how to change the channel.)
  - Switch to a wired LAN connection.
- Particularly when you play back large music files, depending on your wireless LAN environment, the playback sound may be interrupted. In this case, make the wired LAN connection. (☞ p. 81)

Sound is interrupted or noise occurs.

- The “Lock Range” setting in the menu is too narrow. Broaden the “Lock Range” setting while listening to music until the music sounds normal. (☞ p. 71)

Desired sound does not come out

The volume does not increase.

- The maximum volume of the audio signal output from the analog audio output terminals (VARIABLE) is set too low. Set the maximum volume using “Volume Limit” on the menu. (☞ p. 72)

Headphone volume is low.

- Switch “H/P Amplifier Gain” to “High” if using headphones with high impedance or low sensitivity. (☞ p. 73)

AirPlay cannot be played back

The AirPlay icon is not displayed on iTunes / iPhone / iPod touch / iPad.

- This unit and PC / iPhone / iPod touch / iPad are not connected to the same network (LAN). Connect it to the same LAN as this unit. (☞ p. 25)
- The firmware on iTunes / iPhone / iPod touch / iPad is not compatible with AirPlay. Update the firmware to the latest version.

Audio is not output.

- The volume on iTunes / iPhone / iPod touch / iPad is set to the minimum level. The volume of the audio output from the analog audio output connectors (VARIABLE) is linked to the volume of your iTunes / iPhone / iPod touch / iPad. Set a proper volume level.
- The AirPlay playback is not performed, or this unit is not selected. Click the AirPlay icon on the iTunes / iPhone / iPod touch / iPad screen and select this unit. (☞ p. 56)

Audio is interrupted during the AirPlay playback on iPhone / iPod touch / iPad.

- Quit the application running in the background of the iPhone/iPod touch/iPad, and then play using AirPlay.
- Some external factors may be affecting the wireless connection. Modify the network environment by taking measures such as shortening the distance from the wireless LAN access point.

iTunes cannot be played back through the remote control unit.

- Enable the “Allow iTunes audio control from remote speakers” setting on iTunes. Then, you can perform playback, pause, and skip operations through the remote control unit.

USB memory devices cannot be played back

USB memory device is not recognized.

- Disconnect and reconnect the USB memory device. (☞ p. 24)
- Mass storage class compatible USB memory devices are supported.
- This unit does not support a connection through a USB hub. Connect the USB memory device directly to the USB port.
- The USB memory device must be formatted to FAT16 or FAT32.
- Not all USB memory devices are guaranteed to work. Some USB memory devices are not recognized. When using a type of portable hard disc drive compatible with the USB connection that requires power from an AC adapter, use the AC adapter that came with the drive.

Files on the USB memory device are not displayed.

- Files of a type not supported by this unit are not displayed. (☞ p. 37)
- This unit is able to display files in a maximum of eight folder layers. A maximum of 5000 files (folders) can also be displayed for each layer. Modify the folder structure of the USB memory device.
- When multiple partitions exist on the USB memory device, only files on the first partition are displayed.

iOS and Android devices are not recognized.

- The USB port of this unit does not support playback from iOS and Android devices.

Files on a USB memory device cannot be played.

- Files are created in a format that is not supported by this unit. Check the formats supported by this unit. (☞ p. 107)
- You are attempting to play a file that is copyright protected. Files that are copyright protected cannot be played on this unit.
- Playback may not be possible if the album art file size exceeds 2 MB.

Bluetooth cannot be played back

Bluetooth devices cannot be connected to this unit.

- The Bluetooth function in the Bluetooth device has not been enabled. See the Owner's Manual of the Bluetooth device to enable the Bluetooth function.
- Bring the Bluetooth device near to this unit.
- The Bluetooth device cannot connect with this unit if it is not compatible with the A2DP profile.
- Turn the power of the Bluetooth device off and on again, and then try again.
- Set "Bluetooth" in the menu to "Enabled". The Bluetooth function does not work when "Bluetooth" is "Disabled".
  (☞ p. 79)

The sound is cut off.

- Bring the Bluetooth device near to this unit.
- Remove obstructions between the Bluetooth device and this unit.
- To prevent electromagnetic interference, locate this unit away from microwave ovens, wireless LAN devices and other Bluetooth devices.
- Reconnect the Bluetooth device.

The Internet radio cannot be played back

A list of broadcasting stations is not displayed.

- The LAN cable is not properly connected, or the network is disconnected. Check the connection status. (☞ p. 25)
- Perform the network diagnostic mode.

Internet Radio cannot be played.

- The selected radio station is broadcasting in a format that is not supported by this unit. Formats that can be played back in this unit are WMA, MP3 and MPEG-4 AAC. (☞ p. 111)
- The firewall function is enabled on the router. Check the firewall setting.
- The IP address is not properly set. (☞ p. 84)
- Check the power of the router is on.
- To obtain the IP address automatically, enable the DHCP server function on the router. Also, set the DHCP setting to “On” on this unit. (☞ p. 84)
- To obtain the IP address manually, set the IP address on this unit. (☞ p. 84)
- Some radio stations broadcast silently during some time period. In this case, no audio is output. Wait for a while and select the same radio station, or select another radio station. (☞ p. 33)
- The selected radio station is not in service. Select a radio station in service.

Cannot connect to favorite radio stations.

- Radio station is not currently in service. Register radio stations in service.

Music files on PC or NAS cannot be played back (Music server)

Files stored on a computer cannot be played.

- Files are stored in a non-compatible format. Record in a compatible format. (☞ p. 110)
- Files that are copyright protected cannot be played on this unit.
- Media sharing settings on the server or NAS do not allow this unit. Change the settings to allow this unit. For details, see the owner's manual of the server or NAS.

Server is not found, or it is not possible to connect to the server.

- The computer's or router's firewall is activated. Check the computer's or router's firewall settings.
- Computer's power is not turned on. Turn on the power.
- Server is not running. Launch the server.
- IP address of this unit is wrong. Check the IP address of this unit. (☞ p. 79)

Files on PC or NAS are not displayed.

- Files of a type not supported by this unit are not displayed. (☞ p. 110)

Music stored on a NAS cannot be played.

- If you use a NAS in conformity with the DLNA standard, enable the DLNA server function in the NAS setting.
- If you use a NAS that does not conform with the DLNA standard, play the music via a PC. Set Windows Media Player's media sharing function and add NAS to the selected play folder.
- If connection is restricted, set audio equipment as the connection target.

Various online services cannot be played

Various online services cannot be played.

- The online service may have been discontinued.

Cannot connect to a wireless LAN network

Cannot connect to the network.

- The network name (SSID), password and encryption setting have not been set up correctly. Configure the network settings according to the setting details of this unit. (☞ p. 83)
- Shorten the distance from the wireless LAN access point and remove any obstructions to improve access first before re-connecting again. Place the unit away from microwave ovens and other network access points.
- Configure the access point channel settings away from channels that are being used by other networks.
- This unit is not compatible with WEP (TSN).

Cannot connect to a WPS Router.

- Check that the WPS mode of the router is operating.
- Press the WPS button on the router and then press the ENTER button within 2 minutes.
- A router/settings that are compatible with WPS 2.0 standards are required. Set the encryption time to “None”, WPA-PSK (AES) or WPA2-PSK (AES). (☞ p. 82)
- If the router encryption method is WEP/WPA-TKIP/WPA2-TKIP, you cannot connect by using the WPS button on the router. In this case, use the “Auto-Scan” or “Manual” method to connect.

Cannot connect to the network using iPhone/iPod touch/iPad.

- Update the iPhone/iPod touch/iPad firmware to the latest version.
- When configuring the settings via a wireless connection, iOS 7 or later needs to be supported.

Audio from digital devices cannot be played back (Optical)

“Signal Unlock” is displayed.

- When digital audio signals cannot be detected properly, “Signal Unlock” is displayed. (☞ p. 54)

“Unsupported” is displayed.

- “Unsupported” is displayed when audio signals that are not supported by this unit are input. Check the audio output signal format from your digital device. (☞ p. 54)

Update/upgrade error messages

If an update/upgrade is interrupted or fails, an error message appears.

Display	Description
Connection failed. Please check your network, then try again.	The network connection is unstable. Connection to the server failed. Check your network environment and try the update again.
Update failed. Please check your network, then try again.	The download of the firmware failed. Check your network environment and try the update again.
Upgrade failed. Please check your network, then try again.	The download of the firmware failed. Check your network environment and try the upgrade again.
Please check your network, unplug and reconnect the power cord, and try again.	The update failed. Press and hold the ⏻ on the main unit for more than 5 seconds, or remove and re-insert the power cord. The update restarts automatically.
Please contact customer service in your area.	This unit may be broken. Contact our Customer Service Center in your area.

Resetting network settings

If network contents cannot be played or the unit cannot connect to the network, restarting the unit may improve the problem. We recommend restarting the unit before returning the settings to the default settings. (☞ p. 92)

If the operations are not improved by restarting the unit, follow the steps below.

Network settings are reset to the factory default values. Make settings again.

However, the menu “Audio” settings are not reset.

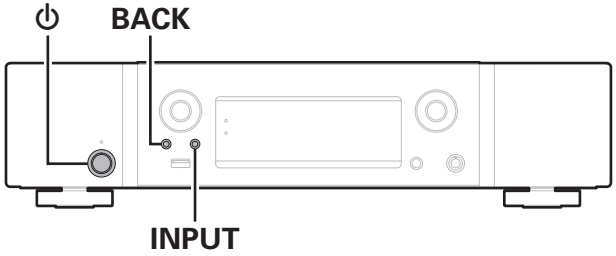

1 **Press ⏻ to turn on power to the unit.**

2 **Press INPUT to select “Internet Radio”, “Music Servers” or “USB Music”.**

3 **Press and hold the main unit’s ⏻ and BACK at the same time for at least 3 seconds.**

4 **Remove your fingers from the two buttons when “Please wait...” appears on the display.**

5 **“Completed” is shown in the display when reset is complete.**

NOTE

- Do not turn the power off until reset is complete.

Playing back a USB memory devices

- This unit is compatible with MP3 ID3-Tag (Ver. 2) standard.
- This unit is compatible with WMA META tags.
- If the image size (pixels) of an album artwork exceeds 500 × 500 (WMA/MP3/Apple Lossless/DSD) or 349 × 349 (MPEG-4 AAC), then music may not be played back properly.

■ Specifications of supported files

	Sampling frequency	Bit rate	Extension
WMA∗1	32/44.1/48 kHz	48 – 192 kbps	.wma
MP3	32/44.1/48 kHz	32 – 320 kbps	.mp3
WAV	32/44.1/48/88.2/ 96/176.4/192 kHz	–	.wav
MPEG-4 AAC∗1	32/44.1/48 kHz	48 – 320 kbps	.aac/.m4a
FLAC	44.1/48/88.2/ 96/176.4/192 kHz	–	.flac
Apple Lossless∗2	44.1/48/88.2/ 96/176.4/192 kHz	–	.m4a
DSD	2.8/5.6 MHz	–	.dsf/.dff

∗1 Only files that are not protected by copyright can be played on this unit.
Content downloaded from pay sites on the Internet are copyright protected. Also, files encoded in WMA format when ripped from a CD, etc. on a computer may be copyright protected, depending on the computer's settings.

∗2 The Apple Lossless Audio Codec (ALAC) decoder is distributed under the Apache License, Version 2.0 (http://www.apache.org/licenses/LICENSE-2.0).

■ Maximum number of playable files and folder

The limits on the number of folders and files that can be displayed by this unit are as follows.

Item \ Media	USB memory device
Number of folder directory levels *1	8 levels
Number of folders	500
Number of files*2	5000

*1 The limited number includes the root folder.

*2 The allowable number of files may differ according to the USB memory device capacity and the file size.

NOTE

- Digital audio output stops during playback of the DSD files.

D/A converter

■ Specifications of supported audio formats

❑ Optical

	Sampling frequency	Bit length
Linear PCM (2-channel)	32/44.1/48/88.2/96/176.4/192 kHz	16/24 bits

Playing back a Bluetooth device

This unit supports the following Bluetooth profile.

- A2DP (Advanced Audio Distribution Profile):
  When a Bluetooth device that supports this standard is connected, monaural and stereo sound data can be streamed at a high quality.
- AVRCP (Audio/Video Remote Control Profile):
  When a Bluetooth device that supports this standard is connected, the Bluetooth device can be operated from this unit.

■ About Bluetooth communications

Radio waves broadcast from this unit may interfere with the operation of medical devices. Make sure you turn off the power of this unit and Bluetooth device in the following locations as radio wave interference may cause malfunctions.

- Hospitals, trains, aircraft, petrol kiosks and places where flammable gases are generated
- Near automatic doors and fire alarms

Playing back files stored on a PC and NAS

- This unit is compatible with MP3 ID3-Tag (Ver. 2) standard.
- This unit is compatible with WMA META tags.
- If the image size (pixels) of an album artwork exceeds 500 × 500 (WMA/MP3/WAV/FLAC) or 349 × 349 (MPEG-4 AAC), then music may not be played back properly.
- A server or server software compatible with distribution in the corresponding formats is required to play music files via a network.

For playing mentioned audio formats via a network a server software, for example Twonky Media Server or jRiver Media Server, needs to be installed on your computer or NAS for full support. There are other server software available too. Please check supported formats.

■ Specifications of supported files

	Sampling frequency	Bit rate	Extension
WMA∗1	32/44.1/48 kHz	48 – 192 kbps	.wma
MP3	32/44.1/48 kHz	32 – 320 kbps	.mp3
WAV	32/44.1/48/88.2/96/176.4/192 kHz	–	.wav
MPEG-4 AAC∗1	32/44.1/48 kHz	48 – 320 kbps	.aac/.m4a
FLAC	44.1/48/88.2/96/176.4/192 kHz	–	.flac
Apple Lossless∗2	44.1/48/88.2/96/176.4/192 kHz	–	.m4a
DSD	2.8/5.6 MHz	–	.dsf/.dff

∗1 Only files that are not protected by copyright can be played on this unit.
Content downloaded from pay sites on the Internet are copyright protected. Also, files encoded in WMA format when ripped from a CD, etc., on a computer may be copyright protected, depending on the computer's settings.

∗2 The Apple Lossless Audio Codec (ALAC) decoder is distributed under the Apache License, Version 2.0 (http://www.apache.org/licenses/LICENSE-2.0).

NOTE

- Digital audio output stops during playback of the DSD files.

Playing back Internet Radio

■ Playable broadcast station specifications

	Sampling frequency	Bit rate	Extension
WMA	32/44.1/48 kHz	48 – 192 kbps	.wma
MP3	32/44.1/48 kHz	32 – 320 kbps	.mp3
MPEG-4 AAC	32/44.1/48 kHz	48 – 320 kbps	.aac/ .m4a

Explanation of terms

■ Audio

Apple Lossless Audio Codec

This is a codec for lossless audio compression method developed by Apple Inc. This codec can be played back on iTunes, iPod or iPhone. Data compressed to approximately 60 – 70 % can be decompressed to exactly the same original data.

DSD (Direct-Stream Digital)

One of the audio data recording methods, it is the signal aspect used to store audio signals on a super audio CD, and is Δ-Σ modulated digital audio.

FLAC (Free Lossless Audio Codec)

FLAC stands for Free lossless Audio Codec, and is a lossless free audio file format. Lossless means that the audio is compressed without any loss in quality.
The FLAC license is as shown below.

Copyright (C) 2000,2001,2002,2003,2004,2005,2006,2007,2008,2009 Josh Coalson

Redistribution and use in source and binary forms, with or without modification, are permitted provided that the following conditions are met:

- Redistributions of source code must retain the above copyright notice, this list of conditions and the following disclaimer.
- Redistributions in binary form must reproduce the above copyright notice, this list of conditions and the following disclaimer in the documentation and/or other materials provided with the distribution.
- Neither the name of the Xiph.org Foundation nor the names of its contributors may be used to endorse or promote products derived from this software without specific prior written permission.

THIS SOFTWARE IS PROVIDED BY THE COPYRIGHT HOLDERS AND CONTRIBUTORS “AS IS” AND ANY EXPRESS OR IMPLIED WARRANTIES, INCLUDING, BUT NOT LIMITED TO, THE IMPLIED WARRANTIES OF MERCHANTABILITY AND FITNESS FOR A PARTICULAR PURPOSE ARE DISCLAIMED. IN NO EVENT SHALL THE FOUNDATION OR CONTRIBUTORS BE LIABLE FOR ANY DIRECT, INDIRECT, INCIDENTAL, SPECIAL, EXEMPLARY, OR CONSEQUENTIAL DAMAGES (INCLUDING, BUT NOT LIMITED TO, PROCUREMENT OF SUBSTITUTE GOODS OR SERVICES; LOSS OF USE, DATA, OR PROFITS; OR BUSINESS INTERRUPTION) HOWEVER CAUSED AND ON ANY THEORY OF LIABILITY, WHETHER IN CONTRACT, STRICT LIABILITY, OR TORT (INCLUDING NEGLIGENCE OR OTHERWISE) ARISING IN ANY WAY OUT OF THE USE OF THIS SOFTWARE, EVEN IF ADVISED OF THE POSSIBILITY OF SUCH DAMAGE.

MP3 (MPEG Audio Layer-3)

This is an internationally standardized audio data compression scheme, using the “MPEG-1” video compression standard. It compresses the data volume to about one eleventh its original size while maintaining sound quality equivalent to a music CD.

MPEG (Moving Picture Experts Group), MPEG-2, MPEG-4

These are the names for digital compression format standards used for the encoding of video and audio. Video standards include “MPEG-1 Video”, “MPEG-2 Video”, “MPEG-4 Visual”, “MPEG-4 AVC”. Audio standards include “MPEG-1 Audio”, “MPEG-2 Audio”, “MPEG-4 AAC”.

WMA (Windows Media Audio)

This is the audio compression technology developed by Microsoft Corporation.
WMA data can be encoded using Windows Media® Player.
To encode WMA files, only use applications authorized by Microsoft Corporation. If you use an unauthorized application, the file may not work properly.

Sampling frequency

Sampling involves taking a reading of a sound wave (analog signal) at regular intervals and expressing the height of the wave at each reading in digitized format (producing a digital signal).
The number of readings taken in one second is called the “sampling frequency”. The larger the value, the closer the reproduced sound is to the original.

Bit rate

This expresses the read amount per 1 second of video/audio data recorded in a disc. A larger number means higher sound quality, but also means a larger file size.

■ Network

AirPlay

AirPlay sends (plays) contents recorded in iTunes or on an iPhone/iPod touch to a compatible device via the network.

WEP Key (network key)

This is key information used for encrypting data when conducting data transfer. On this unit, the same WEP key is used for data encryption and decryption, so the same WEP key must be set on both devices in order for communications to be established between them.

Wi-Fi®

Wi-Fi Certification assures tested and proven interoperability by the Wi-Fi Alliance, a group certifying interoperability among wireless LAN devices.

WPA (Wi-Fi Protected Access)

This is a security standard established by the Wi-Fi Alliance. In addition to the conventional SSID (network name) and WEP key (network key), it also uses a user identification function and encrypting protocol for stronger security.

WPA2 (Wi-Fi Protected Access 2)

This is a new version of the WPA established by the Wi-Fi Alliance, compatible with more secure AES encryption.

WPA-PSK/WPA2-PSK (Pre-shared Key)

This is a simple authentication system for mutual authentication when a preset character string matches on the wireless LAN access point and client.

Network Names (SSID: Service Set Identifier)

When forming wireless LAN networks, groups are formed to prevent interference, data theft, etc. These groups are based on “SSID (network names)”. For enhanced security, a WEP key is set so that communication is unavailable unless both the “SSID” and the WEP key match. This is suitable for constructing a simplified network.

■ Other

Pairing

Pairing (registration) is an operation that is required in order to connect a Bluetooth device to this unit using Bluetooth. When paired, the devices authenticate each other and can connect without mistaken connections occurring.
When using Bluetooth connection for the first time, you need to pair this unit and the Bluetooth device to be connected.

Trademark information

Works with Apple AirPlay

Apple, AirPlay, iPad, iPad Air, iPad Pro and iPhone are trademarks of Apple Inc., registered in the U.S. and other countries.

The trademark "iPhone" is used in Japan with a license from Aiphone K.K.

Use of the Works with Apple badge means that an accessory has been designed to work specifically with the technology identified in the badge and has been certified by the developer to meet Apple performance standards.

Bluetooth®

The Bluetooth® word mark and logos are registered trademarks owned by the Bluetooth SIG, Inc. and any use of such marks by D&M Holdings Inc. is under license. Other trademarks and trade names are those of their respective owners.

Wi Fi® CERTIFIED

The Wi-Fi CERTIFIED logo is a registered trademark of the Wi-Fi Alliance.

Wi-Fi Certification provides assurance that the device has passed the interoperability test conducted by the Wi-Fi Alliance, a group that certifies interoperability among wireless LAN devices.

Specifications

■ Audio section

• Analog output	[DSD]	[PCM]
Channels:	2-channel	2-channel
Playable frequency range:	2 Hz – 100 kHz	2 Hz – 96 kHz (sampling frequency: 192 kHz) 2 Hz – 20 kHz (sampling frequency: 44.1 kHz)
Playable frequency response:	2 Hz – 50 kHz (-3 dB)	2 Hz – 50 kHz (-3 dB) (sampling frequency: 192 kHz) 2 Hz – 20 kHz (sampling frequency: 44.1 kHz)
S/N:	113 dB (Audible range)	115 dB
Dynamic range:	110 dB (Audible range)	110 dB (24 bit) 101 dB (16 bit)
Harmonic distortion:	0.0010 % (Audible range)	0.0010 % (24 bit) 0.0016 % (16 bit)
Output level		
Unbalanced output (FIXED):	2.2 V RMS	2.2 V RMS
Unbalanced output (VARIABLE):	4.5 V RMS (variable maximum)	4.5 V RMS (variable maximum)
Headphone output:	30 mW / 32 Ω/ohms (variable maximum)	30 mW / 32 Ω/ohms (variable maximum)

- **Digital output**

Optical :	-15 – -21 dBm

- **Digital input**

Optical :	–27 dBm or lator
USB (Front):	USB Type A (USB 2.0 High speed)

■ Wireless LAN section

Network type (wireless LAN standard):	Conforming to IEEE 802.11a/b/g/n (Wi-Fi® compliant) *1
Security:	WEP 64 bit, WEP 128 bit WPA/WPA2-PSK (AES) WPA/WPA2-PSK (TKIP)
Used frequency range:	2.4 GHz, 5 GHz

*1 The Wi-Fi® CERTIFIED Logo and the Wi-Fi CERTIFIED On-Product Logo are registered trademarks of the Wi-Fi Alliance.

■ Bluetooth section

Communications system:	Bluetooth Specification Version 3.0 + EDR (Enhanced Data Rate)
Transmission power:	Bluetooth Specification Power Class 1
Maximum communication range:	Approx. 30 m in line of sight *2
Used frequency range:	2.4 GHz
Modulation scheme:	FHSS (Frequency-Hopping Spread Spectrum)
Supported profiles:	A2DP (Advanced Audio Distribution Profile) 1.2 AVRCP (Audio Video Remote Control Profile) 1.5
Corresponding codec:	SBC
Transmission range (A2DP):	20 Hz – 20,000 Hz

*2 The actual communication range varies depending on the influence of such factors as obstructions between devices, electromagnetic waves from microwave ovens, static electricity, cordless phones, reception sensitivity, antenna performance, operating system, application software etc.

■ General

Operating temperature: +5 ℃ - +35 ℃
Power supply: AC 230 V, 50/60 Hz
Power consumption: 35 W
Power consumption in standby modes :

Standby modes	Setting item in the menu Network Control (☞ p. 80)	Power consumption
Normal standby	Off	0.1 W
Network control (Bluetooth) *3	On	3.2 W
Network control (Ethernet) *3	On	3.2 W
Network control (Wi-Fi) *3	On	3.7 W
Network control (USB) *3	On	4.1 W
Network control (Bluetooth, Ethernet, Wi-Fi, USB) *3	On	4.1 W

*3 When this unit enters standby after audio playback using the function in parentheses.

For the purpose of improvement, the specifications and design are subject to change without notice.

■ Dimensions (Unit : mm)

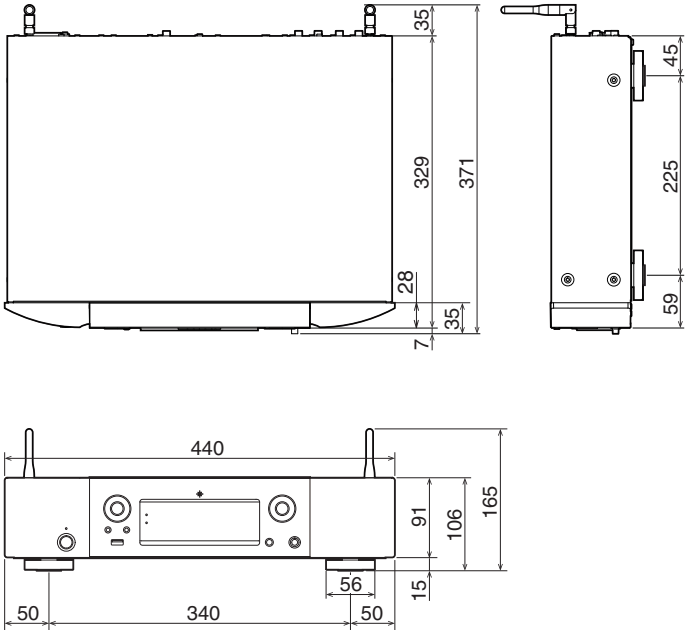

■ Weight : 6.6 kg

Index

☞ A

AirPlay 55
Amplifier 21
Auto Standby 74

☞ B

Bluetooth device 40

☞ D

D/A converter function 53, 108
Display's brightness 61

☞ E

External control device 27

☞ F

Firmware update 75
Front panel 12

☞ H

HEOS Account 45, 86
HEOS Favorites 60

☞ I

Input source 31
Inputting characters 69
Internet Radio 32

☞ M

Menu map 63

☞ N

NAS 34, 110
Network settings 79

☞ P

Pairing 40
PC 34, 110

☞ Q

Queue 35, 38, 48

☞ R

Rear panel 14
Remote control unit 16
Resetting network settings 106

☞ S

Sleep timer 62
Spotify 59

☞ T

Tips 90
Troubleshooting 92

☞ U

USB memory device 24, 37

☞ W

Wi-Fi settings 81
Wired LAN 25, 81
Wireless LAN 26, 81

License

■ License information for the software used in the unit

About GPL (GNU-General Public License), LGPL (GNU Lesser General Public License) License

This product uses GPL/LGPL software and software made by other companies.

After you purchase this product, you may procure, modify or distribute the source code of the GPL/LGPL software that is used in the product.

Marantz provides the source code based on the GPL and LPGL licenses at the actual cost upon your request to our customer service center. However, note that we make no guarantees concerning the source code. Please also understand that we do not offer support for the contents of the source code.

This section describes software license used for this unit. To maintain the correct content, the original (English) is used.

❑ GPL

Open Source Used	Version
bridge-utils	2.8
busybox	1.21.1
ebtables	2.0.10-4
Linux kernel	3.10.74
mtd-utils	1.4.3
ntfs-3g_ntfsprogs	2011.4.12
ntpclient	2007
u-boot	2015.01
wireless-tools	29

❑ LGPL

Open Source Used	Version
ffmpeg	0.8.3
glibc	2.9
libmms	0.6.2

❑ curl-7.24.0

COPYRIGHT AND PERMISSION NOTICE

Copyright (c) 1996 - 2014, Daniel Stenberg, <daniel@haxx.se>

All rights reserved.

Permission to use, copy, modify, and distribute this software for any purpose with or without fee is hereby granted, provided that the above copyright notice and this permission notice appear in all copies.

THE SOFTWARE IS PROVIDED "AS IS", WITHOUT WARRANTY OF ANY KIND, EXPRESS OR IMPLIED, INCLUDING BUT NOT LIMITED TO THE WARRANTIES OF MERCHANTABILITY, FITNESS FOR A PARTICULAR PURPOSE AND NONINFRINGEMENT OF THIRD PARTY RIGHTS. IN NO EVENT SHALL THE AUTHORS OR COPYRIGHT HOLDERS BE LIABLE FOR ANY CLAIM, DAMAGES OR OTHER LIABILITY, WHETHER IN AN ACTION OF CONTRACT, TORT OR OTHERWISE, ARISING FROM, OUT OF OR IN CONNECTION WITH THE SOFTWARE OR THE USE OR OTHER DEALINGS IN THE SOFTWARE.

Except as contained in this notice, the name of a copyright holder shall not be used in advertising or otherwise to promote the sale, use or other dealings in this Software without prior written authorization of the copyright holder.

❑ e2fsprogs-libs-1.40.8/lib/uuid

Redistribution and use in source and binary forms, with or without modification, are permitted provided that the following conditions are met:

1. Redistributions of source code must retain the above copyright notice, and the entire permission notice in its entirety, including the disclaimer of warranties.
2. Redistributions in binary form must reproduce the above copyright notice, this list of conditions and the following disclaimer in the documentation and/or other materials provided with the distribution.
3. The name of the author may not be used to endorse or promote products derived from this software without specific prior written permission.

THIS SOFTWARE IS PROVIDED "AS IS" AND ANY EXPRESS OR IMPLIED WARRANTIES, INCLUDING, BUT NOT LIMITED TO, THE IMPLIED WARRANTIES OF MERCHANTABILITY AND FITNESS FOR A PARTICULAR PURPOSE, ALL OF WHICH ARE HEREBY DISCLAIMED. IN NO EVENT SHALL THE AUTHOR BE LIABLE FOR ANY DIRECT, INDIRECT, INCIDENTAL, SPECIAL, EXEMPLARY, OR CONSEQUENTIAL DAMAGES (INCLUDING, BUT NOT LIMITED TO, PROCUREMENT OF SUBSTITUTE GOODS OR SERVICES; LOSS OF USE, DATA, OR PROFITS; OR BUSINESS INTERRUPTION) HOWEVER CAUSED AND ON ANY THEORY OF LIABILITY, WHETHER IN CONTRACT, STRICT LIABILITY, OR TORT (INCLUDING NEGLIGENCE OR OTHERWISE) ARISING IN ANY WAY OUT OF THE USE OF THIS SOFTWARE, EVEN IF NOT ADVISED OF THE POSSIBILITY OF SUCH DAMAGE.

❑ expat-2.0.1

Copyright (c) 1998, 1999, 2000 Thai Open Source Software Center Ltd and Clark Cooper

Copyright (c) 2001, 2002, 2003, 2004, 2005, 2006 Expat maintainers.

Permission is hereby granted, free of charge, to any person obtaining a copy of this software and associated documentation files (the "Software"), to deal in the Software without restriction, including without limitation the rights to use, copy, modify, merge, publish, distribute, sublicense, and/or sell copies of the Software, and to permit persons to whom the Software is furnished to do so, subject to the following conditions:

The above copyright notice and this permission notice shall be included in all copies or substantial portions of the Software.

THE SOFTWARE IS PROVIDED "AS IS", WITHOUT WARRANTY OF ANY KIND, EXPRESS OR IMPLIED, INCLUDING BUT NOT LIMITED TO THE WARRANTIES OF MERCHANTABILITY, FITNESS FOR A PARTICULAR PURPOSE AND NONINFRINGEMENT.

IN NO EVENT SHALL THE AUTHORS OR COPYRIGHT HOLDERS BE LIABLE FOR ANY CLAIM, DAMAGES OR OTHER LIABILITY, WHETHER IN AN ACTION OF CONTRACT, TORT OR OTHERWISE, ARISING FROM, OUT OF OR IN CONNECTION WITH THE SOFTWARE OR THE USE OR OTHER DEALINGS IN THE SOFTWARE.

❑ getopt

http://cvsweb.netbsd.org/bsdweb.cgi/src/lib/libc/stdlib/

Copyright (c) 1987, 1993, 1994 The Regents of the University of California. All rights reserved.

Redistribution and use in source and binary forms, with or without modification, are permitted provided that the following conditions are met:

1. Redistributions of source code must retain the above copyright notice, this list of conditions and the following disclaimer.
2. Redistributions in binary form must reproduce the above copyright notice, this list of conditions and the following disclaimer in the documentation and/or other materials provided with the distribution.
3. Neither the name of the University nor the names of its contributors may be used to endorse or promote products derived from this software without specific prior written permission.

THIS SOFTWARE IS PROVIDED BY THE REGENTS AND CONTRIBUTORS "AS IS" AND ANY EXPRESS OR IMPLIED WARRANTIES, INCLUDING, BUT NOT LIMITED TO, THE IMPLIED WARRANTIES OF MERCHANTABILITY AND FITNESS FOR A PARTICULAR PURPOSE ARE DISCLAIMED. IN NO EVENT SHALL THE REGENTS OR CONTRIBUTORS BE LIABLE FOR ANY DIRECT, INDIRECT, INCIDENTAL, SPECIAL, EXEMPLARY, OR CONSEQUENTIAL DAMAGES (INCLUDING, BUT NOT LIMITED TO, PROCUREMENT OF SUBSTITUTE GOODS OR SERVICES; LOSS OF USE, DATA, OR PROFITS; OR BUSINESS INTERRUPTION) HOWEVER CAUSED AND ON ANY THEORY OF LIABILITY, WHETHER IN CONTRACT, STRICT LIABILITY, OR TORT (INCLUDING NEGLIGENCE OR OTHERWISE) ARISING IN ANY WAY OUT OF THE USE OF THIS SOFTWARE, EVEN IF ADVISED OF THE POSSIBILITY OF SUCH DAMAGE.

❑ jQuery

Copyright 2014 jQuery Foundation and other contributors
http://jquery.com/

Permission is hereby granted, free of charge, to any person obtaining a copy of this software and associated documentation files (the "Software"), to deal in the Software without restriction, including without limitation the rights to use, copy, modify, merge, publish, distribute, sublicense, and/or sell copies of the Software, and to permit persons to whom the Software is furnished to do so, subject to the following conditions:

The above copyright notice and this permission notice shall be included in all copies or substantial portions of the Software.

THE SOFTWARE IS PROVIDED "AS IS", WITHOUT WARRANTY OF ANY KIND, EXPRESS OR IMPLIED, INCLUDING BUT NOT LIMITED TO THE WARRANTIES OF MERCHANTABILITY, FITNESS FOR A PARTICULAR PURPOSE AND NONINFRINGEMENT. IN NO EVENT SHALL THE AUTHORS OR COPYRIGHT HOLDERS BE LIABLE FOR ANY CLAIM, DAMAGES OR OTHER LIABILITY, WHETHER IN AN ACTION OF CONTRACT, TORT OR OTHERWISE, ARISING FROM, OUT OF OR IN CONNECTION WITH THE SOFTWARE OR THE USE OR OTHER DEALINGS IN THE SOFTWARE.

❑ libpcap-1.4.0

License: BSD

Redistribution and use in source and binary forms, with or without modification, are permitted provided that the following conditions are met:

1. Redistributions of source code must retain the above copyright notice, this list of conditions and the following disclaimer.
2. Redistributions in binary form must reproduce the above copyright notice, this list of conditions and the following disclaimer in the documentation and/or other materials provided with the distribution.
3. The names of the authors may not be used to endorse or promote products derived from this software without specific prior written permission.

THIS SOFTWARE IS PROVIDED "AS IS" AND WITHOUT ANY EXPRESS OR IMPLIED WARRANTIES, INCLUDING, WITHOUT LIMITATION, THE IMPLIED WARRANTIES OF MERCHANTABILITY AND FITNESS FOR A PARTICULAR PURPOSE.

❑ libtar-1.2.11

Copyright (c) 1998-2003 University of Illinois Board of Trustees
Copyright (c) 1998-2003 Mark D. Roth
All rights reserved.

Developed by: Campus Information Technologies and Educational Services, University of Illinois at Urbana-Champaign

Permission is hereby granted, free of charge, to any person obtaining a copy of this software and associated documentation files (the "Software"), to deal with the Software without restriction, including without limitation the rights to use, copy, modify, merge, publish, distribute, sublicense, and/or sell copies of the Software, and to permit persons to whom the Software is furnished to do so, subject to the following conditions:

- Redistributions of source code must retain the above copyright notice, this list of conditions and the following disclaimers.
- Redistributions in binary form must reproduce the above copyright notice, this list of conditions and the following disclaimers in the documentation and/or other materials provided with the distribution.
- Neither the names of Campus Information Technologies and Educational Services, University of Illinois at Urbana-Champaign, nor the names of its contributors may be used to endorse or promote products derived from this Software without specific prior written permission.

THE SOFTWARE IS PROVIDED "AS IS", WITHOUT WARRANTY OF ANY KIND, EXPRESS OR IMPLIED, INCLUDING BUT NOT LIMITED TO THE WARRANTIES OF MERCHANTABILITY, FITNESS FOR A PARTICULAR PURPOSE AND NONINFRINGEMENT.

IN NO EVENT SHALL THE CONTRIBUTORS OR COPYRIGHT HOLDERS BE LIABLE FOR ANY CLAIM, DAMAGES OR OTHER LIABILITY, WHETHER IN AN ACTION OF CONTRACT, TORT OR OTHERWISE, ARISING FROM, OUT OF OR IN CONNECTION WITH THE SOFTWARE OR THE USE OR OTHER DEALINGS WITH THE SOFTWARE.

❑ mDNS 320.10.80

The majority of the source code in the mDNSResponder project is licensed under the terms of the Apache License, Version 2.0, available from:
<http://www.apache.org/licenses/LICENSE-2.0>

To accommodate license compatibility with the widest possible range of client code licenses, the shared library code, which is linked at runtime into the same address space as the client using it, is licensed under the terms of the "Three-Clause BSD License".

The Linux Name Service Switch code, contributed by National ICT Australia Ltd (NICTA) is licensed under the terms of the NICTA Public Software Licence (which is substantially similar to the "Three-Clause BSD License", with some additional language pertaining to Australian law).

❑ mongoose

https://github.com/cesanta/mongoose/

Copyright (c) 2004-2013 Sergey Lyubka

Permission is hereby granted, free of charge, to any person obtaining a copy of this software and associated documentation files (the "Software"), to deal in the Software without restriction, including without limitation the rights to use, copy, modify, merge, publish, distribute, sublicense, and/or sell copies of the Software, and to permit persons to whom the Software is furnished to do so, subject to the following conditions:

The above copyright notice and this permission notice shall be included in all copies or substantial portions of the Software.

THE SOFTWARE IS PROVIDED "AS IS", WITHOUT WARRANTY OF ANY KIND, EXPRESS OR IMPLIED, INCLUDING BUT NOT LIMITED TO THE WARRANTIES OF MERCHANTABILITY, FITNESS FOR A PARTICULAR PURPOSE AND NONINFRINGEMENT. IN NO EVENT SHALL THE AUTHORS OR COPYRIGHT HOLDERS BE LIABLE FOR ANY CLAIM, DAMAGES OR OTHER LIABILITY, WHETHER IN AN ACTION OF CONTRACT, TORT OR OTHERWISE, ARISING FROM, OUT OF OR IN CONNECTION WITH THE SOFTWARE OR THE USE OR OTHER DEALINGS IN THE SOFTWARE.

❑ openssl-1.0.0d

Copyright (c) 1998-2011 The OpenSSL Project. All rights reserved.

Redistribution and use in source and binary forms, with or without modification, are permitted provided that the following conditions are met:

1. Redistributions of source code must retain the above copyright notice, this list of conditions and the following disclaimer.
2. Redistributions in binary form must reproduce the above copyright notice, this list of conditions and the following disclaimer in the documentation and/or other materials provided with the distribution.
3. All advertising materials mentioning features or use of this software must display the following acknowledgment:
   "This product includes software developed by the OpenSSL Project for use in the OpenSSL Toolkit. (http://www.openssl.org/)"
4. The names "OpenSSL Toolkit" and "OpenSSL Project" must not be used to endorse or promote products derived from this software without prior written permission. For written permission, please contact openssl-core@openssl.org.
5. Products derived from this software may not be called "OpenSSL" nor may "OpenSSL" appear in their names without prior written permission of the OpenSSL Project.
6. Redistributions of any form whatsoever must retain the following acknowledgment:
   "This product includes software developed by the OpenSSL Project for use in the OpenSSL Toolkit (http://www.openssl.org/)"

THIS SOFTWARE IS PROVIDED BY THE OpenSSL PROJECT "AS IS" AND ANY EXPRESSED OR IMPLIED WARRANTIES, INCLUDING, BUT NOT LIMITED TO, THE IMPLIED WARRANTIES OF MERCHANTABILITY AND FITNESS FOR A PARTICULAR PURPOSE ARE DISCLAIMED. IN NO EVENT SHALL THE OpenSSL PROJECT OR ITS CONTRIBUTORS BE LIABLE FOR ANY DIRECT, INDIRECT, INCIDENTAL, SPECIAL, EXEMPLARY, OR CONSEQUENTIAL DAMAGES (INCLUDING, BUT NOT LIMITED TO, PROCUREMENT OF SUBSTITUTE GOODS OR SERVICES; LOSS OF USE, DATA, OR PROFITS; OR BUSINESS INTERRUPTION) HOWEVER CAUSED AND ON ANY THEORY OF LIABILITY, WHETHER IN CONTRACT, STRICT LIABILITY, OR TORT (INCLUDING NEGLIGENCE OR OTHERWISE) ARISING IN ANY WAY OUT OF THE USE OF THIS SOFTWARE, EVEN IF ADVISED OF THE POSSIBILITY OF SUCH DAMAGE.

This product includes cryptographic software written by Eric Young (eay@cryptsoft.com). This product includes software written by Tim Hudson (tjh@cryptsoft.com).

❑ portmap-6.0

Copyright (c) 1990 The Regents of the University of California.

- All rights reserved.
- Redistribution and use in source and binary forms, with or without modification, are permitted provided that the following conditions are met:

1. Redistributions of source code must retain the above copyright notice, this list of conditions and the following disclaimer.
2. Redistributions in binary form must reproduce the above copyright notice, this list of conditions and the following disclaimer in the documentation and/or other materials provided with the distribution.
3. A ll advertising materials mentioning features or use of this software must display the following acknowledgement:
   This product includes software developed by the University of California, Berkeley and its contributors.
4. Neither the name of the University nor the names of its contributors may be used to endorse or promote products derived from this software without specific prior written permission.

- THIS SOFTWARE IS PROVIDED BY THE REGENTS AND CONTRIBUTORS "AS IS" AND ANY EXPRESS OR IMPLIED WARRANTIES, INCLUDING, BUT NOT LIMITED TO, THE IMPLIED WARRANTIES OF MERCHANTABILITY AND FITNESS FOR A PARTICULAR PURPOSE ARE DISCLAIMED. IN NO EVENT SHALL THE REGENTS OR CONTRIBUTORS BE LIABLE FOR ANY DIRECT, INDIRECT, INCIDENTAL, SPECIAL, EXEMPLARY, OR CONSEQUENTIAL DAMAGES (INCLUDING, BUT NOT LIMITED TO, PROCUREMENT OF SUBSTITUTE GOODS OR SERVICES; LOSS OF USE, DATA, OR PROFITS; OR BUSINESS INTERRUPTION) HOWEVER CAUSED AND ON ANY THEORY OF LIABILITY, WHETHER IN CONTRACT, STRICT LIABILITY, OR TORT (INCLUDING NEGLIGENCE OR OTHERWISE) ARISING IN ANY WAY OUT OF THE USE OF THIS SOFTWARE, EVEN IF ADVISED OF THE POSSIBILITY OF SUCH DAMAGE.

❑ pstdint.h-0.1.12

- BSD License:
- Copyright (c) 2005-2011 Paul Hsieh
- All rights reserved.
- Redistribution and use in source and binary forms, with or without modification, are permitted provided that the following conditions are met:

1. Redistributions of source code must retain the above copyright notice, this list of conditions and the following disclaimer.
2. Redistributions in binary form must reproduce the above copyright notice, this list of conditions and the following disclaimer in the documentation and/or other materials provided with the distribution.
3. The name of the author may not be used to endorse or promote products derived from this software without specific prior written permission.

- THIS SOFTWARE IS PROVIDED BY THE AUTHOR "AS IS" AND ANY EXPRESS OR IMPLIED WARRANTIES, INCLUDING, BUT NOT LIMITED TO, THE IMPLIED WARRANTIES OF MERCHANTABILITY AND FITNESS FOR A PARTICULAR PURPOSE ARE DISCLAIMED.
- IN NO EVENT SHALL THE AUTHOR BE LIABLE FOR ANY DIRECT, INDIRECT, INCIDENTAL, SPECIAL, EXEMPLARY, OR CONSEQUENTIAL DAMAGES (INCLUDING, BUT NOT LIMITED TO, PROCUREMENT OF SUBSTITUTE GOODS OR SERVICES; LOSS OF USE, DATA, OR PROFITS; OR BUSINESS INTERRUPTION) HOWEVER CAUSED AND ON ANY THEORY OF LIABILITY, WHETHER IN CONTRACT, STRICT LIABILITY, OR TORT (INCLUDING NEGLIGENCE OR OTHERWISE) ARISING IN ANY WAY OUT OF THE USE OF THIS SOFTWARE, EVEN IF ADVISED OF THE POSSIBILITY OF SUCH DAMAGE.

❑ rl78flash 2000.3.1

License
=======
The MIT License (MIT)
Copyright (c) 2012 Maxim Salov

Permission is hereby granted, free of charge, to any person obtaining a copy of this software and associated documentation files (the "Software"), to deal in the Software without restriction, including without limitation the rights to use, copy, modify, merge, publish, distribute, sublicense, and/or sell copies of the Software, and to permit persons to whom the Software is furnished to do so, subject to the following conditions:

The above copyright notice and this permission notice shall be included in all copies or substantial portions of the Software.

THE SOFTWARE IS PROVIDED "AS IS", WITHOUT WARRANTY OF ANY KIND, EXPRESS OR IMPLIED, INCLUDING BUT NOT LIMITED TO THE WARRANTIES OF MERCHANTABILITY, FITNESS FOR A PARTICULAR PURPOSE AND NONINFRINGEMENT. IN NO EVENT SHALL THE AUTHORS OR COPYRIGHT HOLDERS BE LIABLE FOR ANY CLAIM, DAMAGES OR OTHER LIABILITY, WHETHER IN AN ACTION OF CONTRACT, TORT OR OTHERWISE, ARISING FROM, OUT OF OR IN CONNECTION WITH THE SOFTWARE OR THE USE OR OTHER DEALINGS IN THE SOFTWARE.

❑ sqlite 2003.5.7

SQLite Copyright
SQLite is in the
Public Domain

All of the code and documentation in SQLite has been dedicated to the public domain by the authors. All code authors, and representatives of the companies they work for, have signed affidavits dedicating their contributions to the public domain and originals of those signed affidavits are stored in a firesafe at the main offices of Hwaci. Anyone is free to copy, modify, publish, use, compile, sell, or distribute the original SQLite code, either in source code form or as a compiled binary, for any purpose, commercial or non-commercial, and by any means.

The previous paragraph applies to the deliverable code and documentation in SQLite - those parts of the SQLite library that you actually bundle and ship with a larger application. Some scripts used as part of the build process (for example the "configure" scripts generated by autoconf) might fall under other open-source licenses. Nothing from these build scripts ever reaches the final deliverable SQLite library, however, and so the licenses associated with those scripts should not be a factor in assessing your rights to copy and use the SQLite library.

All of the deliverable code in SQLite has been written from scratch. No code has been taken from other projects or from the open internet. Every line of code can be traced back to its original author, and all of those authors have public domain dedications on file. So the SQLite code base is clean and is uncontaminated with licensed code from other projects.

❑ strlcpy.c , v1.11

- Copyright (c) 1998 Todd C. Miller <Todd.Miller@courtesan.com>
- Permission to use, copy, modify, and distribute this software for any purpose with or without fee is hereby granted, provided that the above copyright notice and this permission notice appear in all copies.
- THE SOFTWARE IS PROVIDED "AS IS" AND THE AUTHOR DISCLAIMS ALL WARRANTIES WITH REGARD TO THIS SOFTWARE INCLUDING ALL IMPLIED WARRANTIES OF MERCHANTABILITY AND FITNESS. IN NO EVENT SHALL THE AUTHOR BE LIABLE FOR ANY SPECIAL, DIRECT, INDIRECT, OR CONSEQUENTIAL DAMAGES OR ANY DAMAGES WHATSOEVER RESULTING FROM LOSS OF USE, DATA OR PROFITS, WHETHER IN AN ACTION OF CONTRACT, NEGLIGENCE OR OTHER TORTIOUS ACTION, ARISING OUT OF OR IN CONNECTION WITH THE USE OR PERFORMANCE OF THIS SOFTWARE.

❑ taglib-1.5

copyright : (C) 2002 - 2008 by Scott Wheeler
email : wheeler@kde.org

"The contents of this file are subject to the Mozilla Public License Version 1.1 (the "License"); you may not use this file except in compliance with the License. You may obtain a copy of the License at http://www.mozilla.org/MPL/

Software distributed under the License is distributed on an "AS IS" basis, WITHOUT WARRANTY OF ANY KIND, either express or implied. See the License for the specific language governing rights and limitations under the License.

❑ tinyxml 2002.4.3

www.sourceforge.net/projects/tinyxml

This software is provided 'as-is', without any express or implied warranty. In no event will the authors be held liable for any damages arising from the use of this software.

Permission is granted to anyone to use this software for any purpose, including commercial applications, and to alter it and redistribute it freely, subject to the following restrictions:

1. The origin of this software must not be misrepresented; you must not claim that you wrote the original software. If you use this software in a product, an acknowledgment in the product documentation would be appreciated but is not required.
2. Altered source versions must be plainly marked as such, and must not be misrepresented as being the original software.
3. This notice may not be removed or altered from any source distribution.

❑ Tremor

http://wiki.xiph.org/index.php/Tremor

Copyright (c) 2002, Xiph.org Foundation

Redistribution and use in source and binary forms, with or without modification, are permitted provided that the following conditions are met:

1. Redistributions of source code must retain the above copyright notice, this list of conditions and the following disclaimer.
2. Redistributions in binary form must reproduce the above copyright notice, this list of conditions and the following disclaimer in the documentation and/or other materials provided with the distribution.
3. Neither the name of the Xiph.org Foundation nor the names of its contributors may be used to endorse or promote products derived from this software without specific prior written permission.

THIS SOFTWARE IS PROVIDED BY THE COPYRIGHT HOLDERS AND CONTRIBUTORS "AS IS" AND ANY EXPRESS OR IMPLIED WARRANTIES, INCLUDING, BUT NOT LIMITED TO, THE IMPLIED WARRANTIES OF MERCHANTABILITY AND FITNESS FOR A PARTICULAR PURPOSE ARE DISCLAIMED. IN NO EVENT SHALL THE FOUNDATION OR CONTRIBUTORS BE LIABLE FOR ANY DIRECT, INDIRECT, INCIDENTAL, SPECIAL, EXEMPLARY, OR CONSEQUENTIAL DAMAGES (INCLUDING, BUT NOT LIMITED TO, PROCUREMENT OF SUBSTITUTE GOODS OR SERVICES; LOSS OF USE, DATA, OR PROFITS; OR BUSINESS INTERRUPTION) HOWEVER CAUSED AND ON ANY THEORY OF LIABILITY, WHETHER IN CONTRACT, STRICT LIABILITY, OR TORT (INCLUDING NEGLIGENCE OR OTHERWISE) ARISING IN ANY WAY OUT OF THE USE OF THIS SOFTWARE, EVEN IF ADVISED OF THE POSSIBILITY OF SUCH DAMAGE.

❑ zlib

http://www.zlib.net/

zlib.h -- interface of the 'zlib' general purpose compression library
version 1.2.3, July 18th, 2005

Copyright (C) 1995-2004 Jean-loup Gailly and Mark Adler

This software is provided 'as-is', without any express or implied warranty. In no event will the authors be held liable for any damages arising from the use of this software.

Permission is granted to anyone to use this software for any purpose, including commercial applications, and to alter it and redistribute it freely, subject to the following restrictions:

1. The origin of this software must not be misrepresented; you must not claim that you wrote the original software. If you use this software in a product, an acknowledgment in the product documentation would be appreciated but is not required.
2. Altered source versions must be plainly marked as such, and must not be misrepresented as being the original software.
3. This notice may not be removed or altered from any source distribution.

Jean-loup Gailly jloup@gzip.org, Mark Adler
madler@alumni.caltech.edu

❑ The Spotify software is subject to third party licenses found here:

www.spotify.com/connect/third-party-licenses

www.marantz.com

You can find your nearest authorized distributor or dealer on our website.

marantz® is a registered trademark.

3520 10626 00AMB

Copyright © 2018 D&M Holdings Inc. All Rights Reserved.